pitney bowes

Postage Meters

DM100i, DM200L™

Digital Postage Meter

Operator Guide

US English Edition
SV63202 Revision E
September 23, 2023

2023 Pitney Bowes Inc.

All rights reserved. This book may not be reproduced in whole or in part in any fashion or stored in a retrieval system of any type or transmitted by any means, electronically or mechanically, without the express written permission of Pitney Bowes.

The use of this information by the recipient or others for purposes other than the training of customers on Pitney Bowes equipment may constitute an infringement of intellectual property rights of Pitney Bowes, and Pitney Bowes assumes no responsibility for any such use of the information.

We have made every reasonable effort to ensure the accuracy and usefulness of this manual. However, we cannot assume responsibility for errors or omissions or liability for the misuse or misapplication of our products.

Except as provided in writing, duly signed by an officer of Pitney Bowes, no license either express or implied, under any Pitney Bowes or third party's patent, copyright or other intellectual property rights is granted by providing this information.

About this Book

This Operator Guide is designed to assist in the daily operations of the DM100i, DM200L Digital Postage Meter. Use this book as a reference, as it includes system operating procedures.

Version History

Document Part Number	Release Date	Comments
SV63202 Rev. B	January 2016	Rebranding and remove Analog and perform Flare conversion
SV63202 Rev. C	September, 2018	SmartLink connectivity added
SV63202 Rev D	September 2023	Updated contact information.
SV63202 Rev E	September 2023	Updated supplies content.

Pitney Bowes Contact List

Machine Identification

Product Name: DM100i and DM200L

PCN / Model Number: Refer to the label on the back of the machine

Resources

For Account Information

Visit us online at *www.pitneybowes.com* and sign in.

For Customer Support

Visit us online at *pitneybowes.com/support*

If you need to contact customer support, refer to *What information you need to provide customer support*.

For Supplies

Visit our *supplies website* to order supplies for your device.

What Information You Need to Provide Customer Support

Be sure to have the following information available before contacting Pitney Bowes Technical Support:

Product Name: DM100 or DM200L Digital Postage Meter

PCN: See the label under the lid at the top of the meter.

Serial Number: See the label under the lid at the top of the meter.

Problem Description: What is happening and when? Any error messages displayed?

Attempts to Fix: What steps have you already tried to fix the problem and what happened.

Table of Contents

Version History 4
Pitney Bowes Contact List 5
What Information You Need to Provide Customer Support 5

1 - Safety

Introduction 10
Battery Handling (California Customers Only) 10
Ear Protection/Noise Exposure Guidelines 10
System Power 11
Operation 11
Maintenance 13

2 - Getting Started

Parts of the Machine 15
The Control Panel 17
Connections on the Back of the Machine 20

3 - What You Can Print on Mail Pieces

Printing Options 23
What's in the Meter Stamp 23
Check the Meter Stamp Imprint 24
Printing a Meter Stamp with an Advanced Date 25
Turning the Date On/Off for a Meter Stamp 26
Printing only the date and time (no meter stamp) 26
Adding and Removing Advertisements at the Machine 27
Printing advertisement, date and time only (no meter stamp) 27
Adding and Removing Inscriptions 28
Seal the Envelope Only - Bypass All Printing .. 29
Adjusting the Horizontal Print Position of the Meter Stamp 29

4 - Running Mail

Power up the Machine 31
Checking the Amount of Postage Available 31
Determine the Amount of Postage Needed 31
Do You Need Add-On USPS Services? 32
Applying Postage Entering Postage In Manually 33
Applying Postage Entering Weight In Manually 34
Applying Postage Using The Weighing Platform 35
Apply Postage Using Differential Weighing Mode 37

5 - Using Batch Count Feature

Viewing the Batch Mail Count 41
Printing the Batch Count 42
Clearing the Batch Count 42

6 - Maintenance

Ink Cartridge Replacement Messages 45
Printing a Test Pattern 45
Purging the Print Heads 46
Replacing the Print Head 47
Replacing the ink cartridge 51
Filling the moistener tank 56
Cleaning the Moistener Brush 57
Cleaning the moistener wick and holder 58

7 - How to Enter Text

About Entering Text 63

8 - Accounting

About Accounts 67
Turning Accounts On and Off 67
Creating an Account 68
Editing Account Name and Password 69
Selecting an Account 69
Viewing Account Totals 70
Printing a single account report 70
Printing a Multi-Account Summary Report 71
Clearing All or Some of the Accounts 72
Deleting an Account 72
Turning On Account Passwords Globally 73
Turning Off Account Passwords Globally 74

9 - Reports

About Reports 77
Printing a Funds Report 78
Printing your Last 5 Refills summary report 79
Rates Summary Report 80
Special Services Report 81
Printing a single account report 82
Printing a Multi-Account Summary Report 83
Configuration Report 84
System Setup Report 84
Account List Report (Standard Accounting) 85
Error code report 85

10 - Configuring Your Mailing Machine

About System Settings 89
Setting System Time 89
Setting the Contrast of the LCD Display 90
Turning Features On and Off 90
Setting the Date, Time and Timeouts 91
Setting Normal Preset Time 91
Sleep Mode Activation Time 92
Setting Autodate Advance 92
Correct Drift 93
Setting Daylight Savings Time 93
Setting, changing, or disabling a lock code 93
Setting Up or Disabling the Supervisor Password 95
Turning Scale On or Off 96
Setting Scale Options (if using scale option) 96
Zeroing your Scale 96
Setting Weight Change Options 97
Setting Class Change Options 97
Setting the High Funds Warning 98
Setting the Low Funds Warning 98
Enabling Scale Stabilizing 98
Setting Language Preference 99
Install Mode Options 99

11 - Using the Preset Feature

About Presets 103
Viewing presets 104
Defining New Values for the Normal Preset ..104
Selecting a Custom Preset 105
Defining a New Custom Preset 105
Editing a Custom Preset Name 105
Deleting a Custom Preset 106

12 - Passwords

About Passwords and Meter Functions 109

13 - Connecting to the Data Center

How You Connect to the PB Data Center 111
Connect to the PB Data Center with SmartLink Using an Ethernet Cable to a LAN Port 112
Setting up a wireless (WiFi) connection with a SmartLink device 113
Connect to the PB Data Center via PC Meter Connect Application on your Computer 114

14 - Adding Postage

Checking Postage Funds in the Meter 117
Checking your PB Postage Account Balance 117
Adding Postage to Your Machine 118
Withdrawing Postage Funds from the Meter .119

15 - Meter Updates and Inspections

About Meter Updates and Inspections 123
About Postal Rate Changes 124
Procedure for Downloading New Postal Rates, Updates, Inscriptions or Ads 125
Downloading New Postal Rates Using PC Meter Connect 126
Performing Meter Inspections 126

16 - Supplies and Options

Supplies and Options 129

17 - Specifications

Specifications (Equipment and Materials) 133

1 - Safety

In this section

Introduction 10
Battery Handling (California Customers Only) 10
Ear Protection/Noise Exposure Guidelines 10
System Power 11
Operation 11
Maintenance 13

Introduction

Familiarize yourself with proper procedures and methods before you install, operate or repair the system to avoid personal injury or damage to the equipment.

Battery Handling (California Customers Only)

The battery used in this product contains perchlorate material. California requires perchlorate containing products to be accompanied by the following notice:

Perchlorate Material - Special handling may apply. For more information refer to the following website: *www.disc.ca.gov.hazardouswaste/perchlorate*.

Ear Protection/Noise Exposure Guidelines

Ear protection is required if noise exposure exceeds OSHA standard. There are many factors to be taken into consideration in each individual work area when dealing with ear protection. Factors such as floor noise, length of exposure to noise, loss of hearing history in individual employees can all play a role in requirements. Analyze your specific work area environment to ensure safe practices.

OSHA Standards

85dBA time weighted average over an 8-hour shift requires hearing protection be made available to employees and use is recommended. (European Union standard is 80dBA)

90dBA time weighted average over an 8-hour shift mandates hearing protection is used. (European Union standard is 85dBA)

NOTE: Local jurisdictions may have more stringent requirements. Refer to local regulations for standards and requirements in your area.

System Power

- Use the power cord supplied with the machine and plug it into a properly grounded wall outlet that is located near to the machine and is easily accessible. Failure to properly ground the machine can result in serious personal injury or fire.
- The power cord wall plug is the primary means of disconnecting the machine from AC power supply for Lock Out/Tag Out.
- *DO NOT* use an adapter plug on the line cord or wall outlet.
- *DO NOT* remove the ground pin from the line cord.
- The machine will be connected to a dedicated AC power line.
- *DO NOT* route the power cord over sharp edges or trap it between furniture.
- Ensure there is no strain on the power cord where it becomes jammed between the equipment, walls or furniture.
- Be certain the area in front of the wall receptacle into which the machine is plugged is free from obstruction.
- Ensure there is no strain on the power cord where it becomes jammed between the equipment, walls or furniture.
- For Input modules and Output modules - power is distributed from the chassis. Use the AC connectors supplied with the modules to connect to system power. Do not connect external devices to the inserter.

Operation

- Only trained personnel are permitted to operate this equipment. Training must include instruction in operation under normal conditions and emergency situations.
- The machine will only be serviced by trained and authorized personnel. Disconnect power source before servicing.
- Personnel working on or near this equipment must be instructed about the location and operation of pertinent stopping devices.
- Never run the machine when any of the covers or guards are missing.
- This equipment is to be used only for the purpose for which it is constructed. Read this manual for the proper use of this equipment.
- Under no circumstances are the safety characteristics of this equipment to be altered. Routine inspections and preventative maintenance measures are to be conducted according to the appropriate schedules in order to ensure that all guards and safety features are active and functioning properly.

- Moving Parts: Avoid touching moving parts or materials while the machine is in use. Keep hands, loose clothing, jewellery and long hair away from all moving parts.
- Before starting the machine, check that: - All persons are clear of the machine – No maintenance work is being performed on the machine - All guards are in place – The machine is free of scraps, jams and foreign objects.
- When opening guards, wait for all parts to stop moving before placing hands near paper path.
- When removing jammed material, avoid using too much force to prevent personal injury and damaging equipment.
- It is essential that personnel employ safe working practices and observe all related regulations and legal requirements for safety when operating this product.
- Lithium ion Battery- This product contains a lithium ion battery. The battery must be recycled or disposed of properly. If you are leasing this product, you must return it to Pitney Bowes. Alternatively, contact your local waste disposal or recycle facility for instructions on how to dispose of it properly.

- **WARNING & CAUTION statements are used in the text of this manual to identify specific hazards, which have potential to cause injury. Pitney Bowes declines all liability in the event of material damage or bodily injury resulting from negligence in the application of these precautions, from non-observation or lack of elementary supervision in respect to handling, operation, servicing or repair, even if not expressly stated in this instruction notice.**

Maintenance

- If you train equipment operators, it's important to explain safety precautions to your students and encourage safety awareness.
- Only documented qualified service personnel should service this equipment per local national requirements.
- Only set-up maintenance, as described in this manual, is to be performed by operators. Any service that requires removal of protective covering is to be performed by qualified service personnel only.
- Use the right tool for the job. A set-up tool is supplied to accommodate running different size paper on the inserter.
- Use only Pitney Bowes approved printer ink and cleaners.
- To prevent overheating, do not cover the vent openings.
- Do not store flammable fluids inside this machine.
- Do not place any container with liquid on this machine, i.e. coffee cups, soda, etc.
- Do not use flammable cleaners in this machine.
- Do not use aerosol air canisters. It is recommended that a vacuum cleaner be used to remove dust and debris from the machine paper path. If you have to use shop air, be sure to turn the system off before you begin cleaning. Be sure shop air does not contain excessive oil or water.
- Do not spray liquid onto or into any part of the machine. Use a cloth to apply cleaning solution.

2 - Getting Started

Parts of the Machine 15
The Control Panel 17
Connections on the Back of the Machine 20

Parts of the Machine

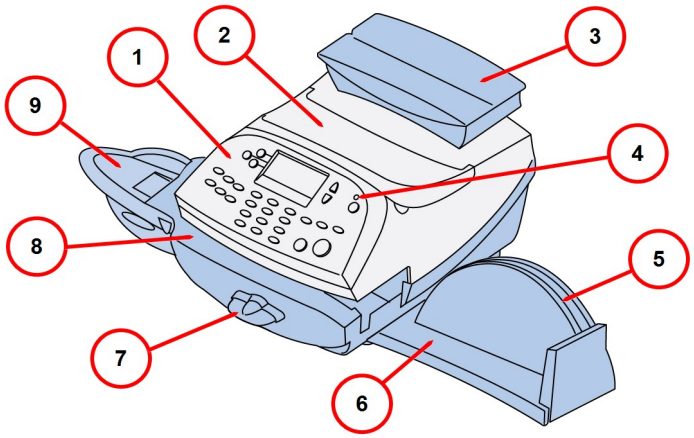

DM125

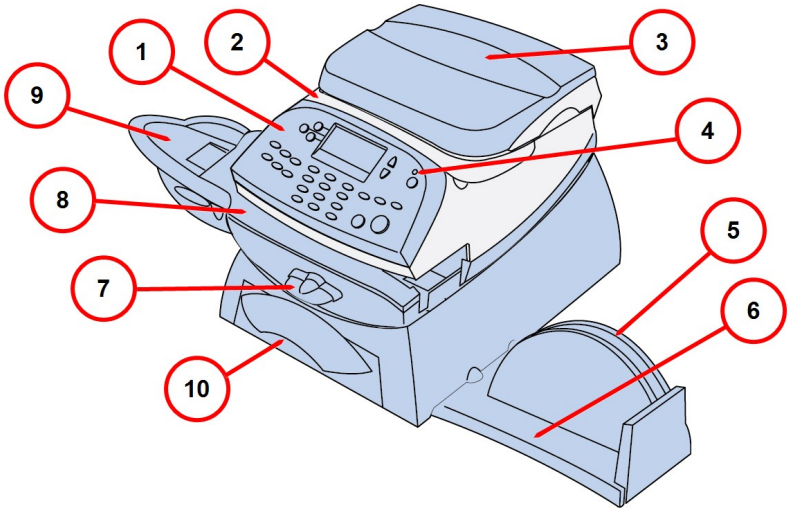

Item	Description
1	*Control Panel*: Allows you to enter and set up information on your mailing system.
2	*Top Cover*: Open this to replace the ink cartridge.
3	*Weighing Platform (optional)*: Allows you to weigh a mail piece for postage calculation.
4	*LED*: Lights green when your machine is on; amber when your machine is in sleep mode.
5	*Utility Slot:* Allows you to store the Quick Reference Guide, tape strips, etc. for easy access.
6	*Stacker Tray:* Allows the neat stacking of finished mail pieces.
7	*Transport Release Lever (two position*: *Home* - transport rollers engaged for processing mail (normal) *Released* - transport rollers disengaged so you can clear a stalled mail piece. NOTE: The machine won't process mail when the lever is left in the released position.
8	*Feed Deck*: Supports your envelope, post card or tape sheet as it passes under the print mechanism.
9	*Moistener (optional)*: Applies sealing fluid to the envelope flap.
10	*Storage Drawer* (DM200L only): Holds Return Receipt and Confirmation Services labels.

The Control Panel

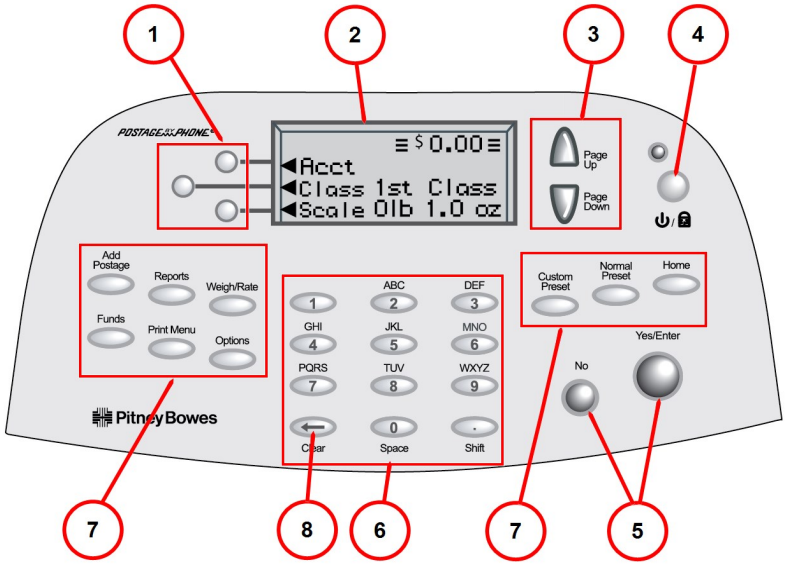

Control Panel

Item	Description
1	*Screen Selection Keys*: Allows you to select an option on the screen with the corresponding key.
2	*LCD Display*: Shows the current status of your system and prompts you through all operations.
3	*Page Up/ Page Down*: Allows you to scroll up and down through menu choices (when lit, it indicates more choices).
4	*Lock/Power Key*: Allows you to power up or power down machine. If the lock code feature has been enabled, you can either power down the machine or put the machine into lock-down mode. In lock-down mode, access to the machine requires entering a four-digit lock code.
5	*Yes/Enter and No Keys*: Allows you to confirm an operation or answer “Yes” or "No" to a prompt (the Yes key also functions as the Enter key for data entry)
6	*Alpha/Numeric Keypad*: Allows you to type in numbers and letters for account names, postage values, and other information, see *How to Enter Text* for more information.

Item	Description
7	***Feature Keys***: Allows you quick access to the key features on the system:
	Home: Returns you directly to the run mail screen from anywhere in the system setup menus, see *Using the Preset Feature* for more information.
	Normal Preset Selects the Normal Preset Values, see *Using the Preset Feature* for more information.
	Custom Preset: Allows you access to up to five or ten custom settings that you can assign values such as postage amount, ad, account number, etc., see *Using the Preset Feature* for more information.
	Funds: Allows you to check your postage funds and number of mail pieces processed, see *Adding and Withdrawing Postage* for more information.
	Add Postage: Allows you to add (refill) postage funds to your machine convenient, see *Adding and Withdrawing Postage* for more information.
	Reports: Allows you to generate reports for postage, accounting, and other types of data, see *Reports* for more information.
	Weight/Rate: Allows you to weigh and calculate postage based on service selected
	Options: Allows you to access system setup information such as date, time, postage, accounts, passwords, etc., see *Configuring Your Mailing Machine* for more information.
	Print Menu: Allows you access to all the information printed on a mail piece such as date, time, postage, ad, inscriptions, etc., see *What You Can Print on Mail Pieces* for more information.
IMPORTANT: When you press one of the Feature keys, any entry in the preceding screen is lost unless you have first pressed the Yes/Enter key to confirm the entry. For example, if you entered an account name on one screen and then immediately pressed another Feature key, the account name will not be recorded by the system.	
8	*Clear Key*: Allows you to delete entrys or backup to a previous screen.

Connections on the Back of the Machine

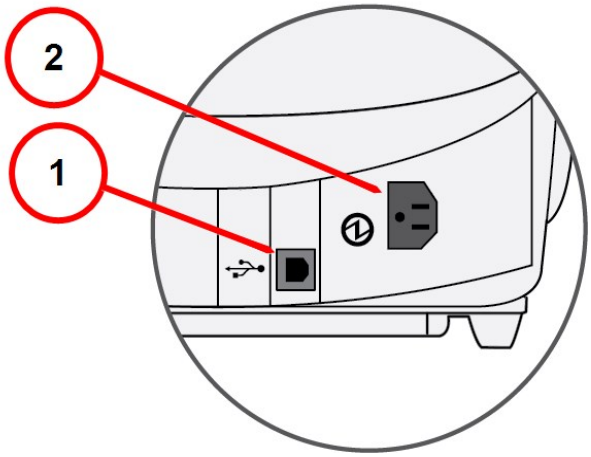

Item	Description
1	*USB Port (type B peripheral port)*: Used to connect to: • the Pitney Bowes Data Center via SmartLink • the Pitney Bowes Data Center via a USB cable connected to a Windows PC that has Internet access (known as PC Meter Connect™ desktop application). See Chapter 6, Adding Postage for more information. • Data Exchange via a PC (optional software product), which allows you to transfer Standard Accounting data from your machine to your PC
2	*Power Switch*: Powers the machine on and off.

This page intentionally left blank.

3 - What You Can Print on Mail Pieces

Printing Options 23
What's in the Meter Stamp 23
Check the Meter Stamp Imprint 24
Printing a Meter Stamp with an Advanced Date 25
Turning the Date On/Off for a Meter Stamp 26
Printing only the date and time (no meter stamp) 26
Adding and Removing Advertisements at the Machine 27
Printing advertisement, date and time only (no meter stamp) 27
Adding and Removing Inscriptions 28
Seal the Envelope Only - Bypass All Printing 29
Adjusting the Horizontal Print Position of the Meter Stamp 29

Printing Options

You can select to print the following components on your mail piece:

- *A normal meter stamp*, also referred to as the indicia includes:
  - Current date/time
  - Datamatrix barcode
  - ZIP code of the machine
  - Meter serial number
  - Postage amount
- *A meter stamp with an advanced date*
- *A meter stamp with no date*
- *A meter stamp with $0.00 postage*
- *An optional advertisement*
- *An optional postal inscription*
- *Printing only the Date and Time (no meter stamp).*
- *Printing Advertisement, Date And Time Only (no meter stamp).*
- *Bypass all printing and Seal the Envelope only*.

For information on printing a normal meter stamp, refer to *Determining the Amount of Postage Needed*.

For information on the locations of the meter stamp and optional components, refer to *What's in the Meter Stamp*.

What's in the Meter Stamp

The location of the meter stamp items on a mail piece or tape strip are shown here.

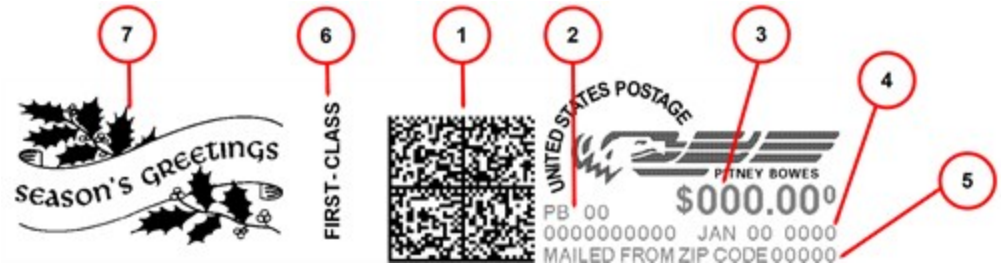

Item	Description
1	Datamatrix barcode - contains tracking information
2	Meter serial number
3	Postage amount
4	Date
5	ZIP code of the machine
6	Optional postal inscription/class
7	Optional advertisement

Meter Stamp, Optional Advertisement and Postal Inscription Components

Check the Meter Stamp Imprint

You can check the meter stamp imprint by printing a meter stamp with $0.00 postage.

To print with $0.00 postage, press **Zero** at the Home screen and press **Enter/yes**, and slide an envelope or a tape sheet through the machine.

Printing a Meter Stamp with an Advanced Date

You may want to advance the date printed on the meter stamp if it is after normal business hours and you want to prepare outgoing mail for a future business day's mailing.

NOTE: The machine automatically advances the printed date on the meter stamp (as well as its internally held date) when the system time reaches 12:00 AM.

Advanced Date Features

- You can advance the date up to 30 days from the current date.
- Changing the printed date does not change the machine's internally held date.
- You can always return the printed date to the current date.
- You cannot change the printed date to a date earlier than the machine's internally held date (in an effort to "backdate" the mail).
- Accounting data is posted on the actual date the mail piece is run (per the internal clock/calendar in the mailing system), *not by the date printed on the meter stamp*.

How to Advance the Date Manually

1. Press **Options**.
2. Select **Advance the date**.
3. The Machine displays the current date in MM DD YY format. You may either:

   Add one day – to advance the date one day.

   Add X days (1-30) – Key in the number (in US from 1-30) representing the number of days that you want to advance the date.

4. Select **Continue**. The new date now shows in the Home screen.

5. To set the date on your mail back to the current date, press **Options** and select **Set to todays date**.

Turning the Date On/Off for a Meter Stamp

Most mailings print the date as part of the meter stamp but for certain classes of mail, you may want to turn off the date. Call your local post office or visit www.pitneybowes.com for further information.

1. Press **Print Menu**.
2. Press **Page Down** and select **Omit day/date/other**.
3. Select either **Omit the day** or **Omit the date**.
4. You return to the Home Screen and either the day or date does not display or print on the meter stamp.

To restore the day or date, perform Steps 1 and 2 above, but select **Restore the day** or **Restore the date** which now displays in Step 3.

Printing only the date and time (no meter stamp)

You may want to use this feature to time-stamp incoming mail or sensitive documents.

1. Press **Print Menu**.
2. Select **Date and Time Only**.
3. Place the envelope up against the registration wall of the system and slide it to the right until the system grasps it. The system prints the time and date and ejects the envelope/tape sheet.
   NOTE: Make sure you orient the mail piece so the date and time prints on a blank section of the mail piece.

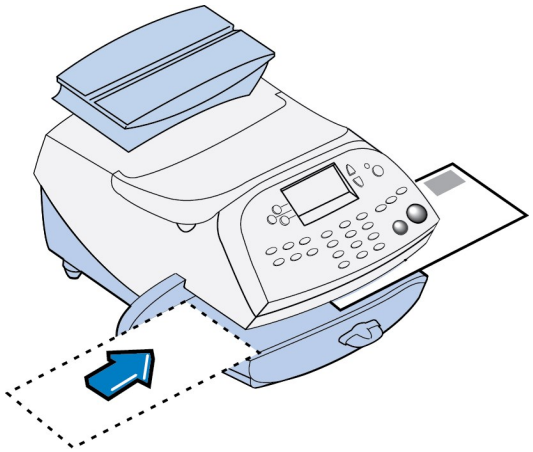

4. Select **Exit Date and Time** when finished to return to the Home screen.

Adding and Removing Advertisements at the Machine

1. From Home screen, press **Page Downn** to second screen and select **AD:**.
2. Select **Select an Ad**.
3. Key in the ad number and press **Yes/Enter** OR scroll through ads and then select the ad.
4. You return to the Home screen with the name of the account listed on the second screen.

Purchasing other Envelope Ads for your Machine

Your machine comes pre-loaded with six envelope ads. If you want another envelope ad, contact Pitney Bowes (see *Pitney Bowes Contact List*). Ready-made items can be purchased and downloaded directly to your machine. You can also work with Pitney Bowes to create custom ads.

Note: Your ad must be purchased and the machine must be connected to Pitney Bowes Data Center for this download procedure.

1. From the Home screen, press **Page Down** to scroll to the second screen and select **AD**.
2. Select **Install an Ad**.
3. Select **Connect now**. The system connects to the Pitney Bowes Data Center (this may take a few moments). The download status of the displays.
4. After connection is made and the download has completed, a message stating so displays. Select **OK**.
5. Return to the Home screen and follow the procedure for *Adding and Removing Advertisements at the Machine*.

Printing advertisement, date and time only (no meter stamp)

1. Press **Print Menu**.
2. Press **Page Down** and select **Ad, Date & Time**.
3. The **Print Ad, Date & Time** screen appears.
   - If you already have an envelope ad set as part of your meter stamp, that ad is listed on the display next to the "Ad" selection. If this is the correct ad, continue with step 4.
   - If you need to change the ad, or select one if none was chosen, select **Ad**, then select **Select an Ad**. Choose an ad from the list provided. You return to the **Print Ad, Date & Time** screen.

4. Place the envelope/tape sheet up against the registration wall of the system and slide it to the right until the system grasps it. The system prints the ad, time and date, and ejects the envelope/tape sheet.
   Make sure you orient the mail piece so the date and time prints on a blank section of the mail piece.

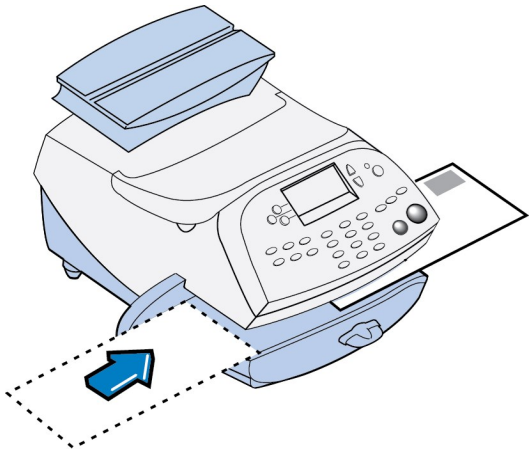

5. Select **Exit Ad Date & Time** when finished to return to the Home screen.

Adding and Removing Inscriptions

Important! The postal inscription that prints on the meter stamp is a separate setting from the postal class you choose when you rate your mailpiece. You rate the mailpiece as part of the procedure(s) for running mail; the inscription and the class should match for your mailpiece. However, if you change one of these on your mailing machine, it does NOT automatically change the other. If you change the inscription be sure it matches the class you select when processing mail. Refer to the *Running Mail* topic for more information.

1. From Home screen, press **Page Down** to second screen and select **Insc.**.
2. Select **Select an Inscript**.
3. Key in the inscription number and press **Yes/Enter** OR scroll through inscriptions and then select the inscription.
4. You return to the Home screen with the name of the inscription listed on the second screen.

Purchasing other Postal Inscriptions for your Machine

Additional inscriptions can be ordered through the Pitney Bowes Supply Line, contact Pitney Bowes (see *Pitney Bowes Contact List*). Inscriptions can be purchased and downloaded directly to your machine.

Seal the Envelope Only - Bypass All Printing

1. Press **Print Menu**.
2. Select **Seal Only**.
3. Place flap along moistener and move towards the right.

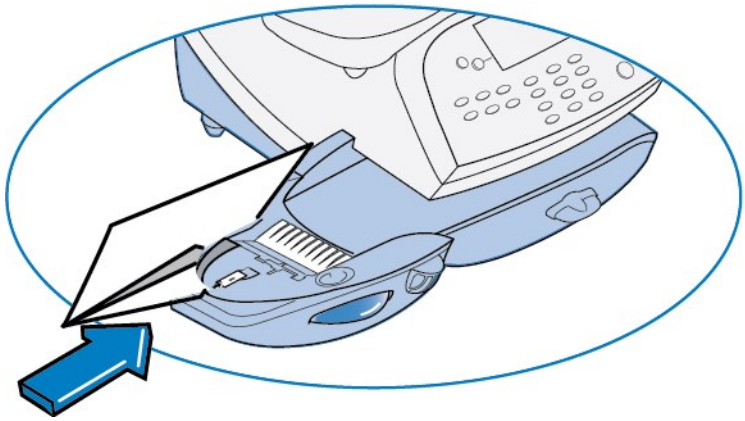

4. Slide the envelope to the right until the system takes hold of it. The system seals and ejects the piece.
5. Select **Exit Seal Only** when finished to return to the Home screen.

Adjusting the Horizontal Print Position of the Meter Stamp

1. Press **Print Menu**.
2. Press **Page Down** and select **Horiz. print pos**.
3. Key in the print distance from the right edge of the envelope to the meter stamp (from 3-24 mm).
4. Press **Yes/Enter** to return to the Print Menu.

4 - Running Mail

Power up the Machine 31
Checking the Amount of Postage Available 31
Determine the Amount of Postage Needed 31
Do You Need Add-On USPS Services? 32
Applying Postage Entering Postage In Manually 33
Applying Postage Entering Weight In Manually 34
Applying Postage Using The Weighing Platform 35
Apply Postage Using Differential Weighing Mode 37

Power up the Machine

When you power up your system, the Home screen appears on the operating display. If your system has been set up to require a Lock Code or password, you are prompted to enter it.

A typical Home screen is show below (with optional scale connected and optional internal rating feature).

```
mmm dd yy          ≡$0.00≡
◀ACCT:  Name
◀CLASS:  None
◀SCALE:   0lb 0.0oz
```

Checking the Amount of Postage Available

1. Press **Funds**.
2. The funds left, used, and pieces processed display.

```
          FUNDS
Available        $204.94
Used              $17.06
Total Pieces          40
```

Available – the amount of funds (postage) left in your meter
Used – the total of all postage ever used in the meter
Total Pieces – the total number of mail pieces run through the meter that had postage applied

3. Press **Clear** (back arrow key) or **Home** to return to Home screen.

Determine the Amount of Postage Needed

The amount of postage required for a mail piece is based on USPS regulations and includes the following factors:

- class of mail (how fast you want the mail piece delivered)
- weight
- shape (for certain size letters and all packages)

Calculate the Postage Manually

If you need to calculate the postage manually, please contact your local Post Office or go to www.pitneybowes.com for the latest rates and fees. Based on those rates and fees and the above factors you can determine the exact postage and can key that amount into the machine. Refer to *Entering Postage Amount Manually*.

Use the Internal Rating to Calculate the Postage

Use the machine can calculate the postage for the mail pieces based on the weight you provide. *Refer to Applying Postage Using Internal Rating.*

Use the Scale with Internal Rating to Calculate Postage

If you have purchased the scale, the machine can calculate the postage required for the mail piece. Refer to *Applying Postage Using Scale and Internal Rating*.

Use the Differential Weighing Mode

Differential weighing is an optional feature that allows you to place multiple items on the scale, remove one item at a time, rate that item, and put postage on it. This is repeated until you have finished all of the items on the scale. This procedure is usually done when you have multiple mail pieces with different weights but all using the same class for rating. *Refer to Apply Postage Using Differential Weighing Mode.*

For All Weighing Modes

Large Piecesand Parcels - Use tape sheets to apply postage for large pieces and parcels that can't be run through the machine. Feed the tape sheets into the machine the same way you would feed an envelope. Apply the postage tape sheets on the mail piece or parcel.

ZIP Codes and Zone Numbers - The system allows you to enter either a ZIP code or a Zone number for those USPS classes and services that require a destination entry (e.g., Priority class over 1 lb.). When prompted to enter a destination in these cases, you may either key in the one-digit Zone number (0-8) and select "This is a Zone" or key in the 5-digit ZIP code and select "This is a ZIP Code".

Do You Need Add-On USPS Services?

If you want to use any of the optional add-on USPS Services (such as insurance, COD, Delivery Confirmation, Signature Confirmation, Return Receipt, etc.), please contact your local Post Office to complete the postage process. You will have to attach specific labels and/or fill out forms and pay additional fees to include these services on your mail piece.

Applying Postage Entering Postage In Manually

This procedure can be used when you already know the weight of a mail piece and you are not using the integrated weighing platform.

1. Press **Weigh/Rate**.
2. Select **Enter Manual Weight**.
3. Key in pounds and select **Set Pounds** (maximum is 70 lbs.).
4. Key in ounces and select **Set oz and Continue**.
5. Select the desired class by pressing the key next to the class name (use the scroll keys to see additional classes).
6. If there is no value next to the class name, more information is needed. Follow the prompts for the options and/or services available for this class of service. The last screen is usually **Services**and lists special services such as COD and Insurance. If you are unsure if a particular class is valid for your mail piece, call your local post office or visit www.pitneybowes.com.
7. Select **Done** when finished entering all the class options and fees.
8. If using the moistener, place flap along moistener and move towards the right.

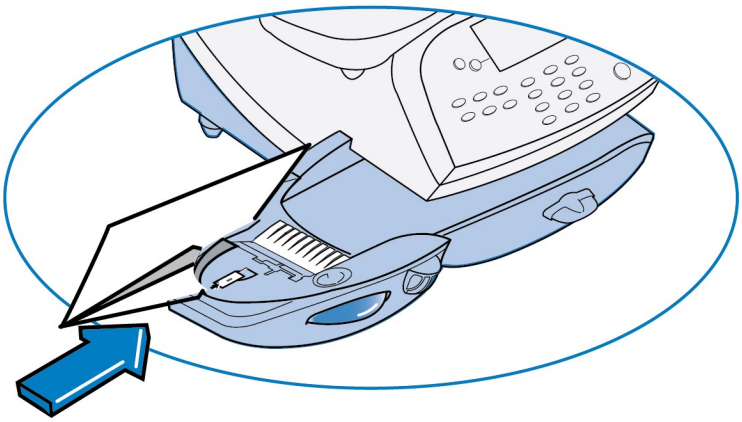

9. Place the envelope up against the registration wall of the system and slide it to the right until the system grasps it. The system prints the meter stamp and ejects the envelope/tape sheet.

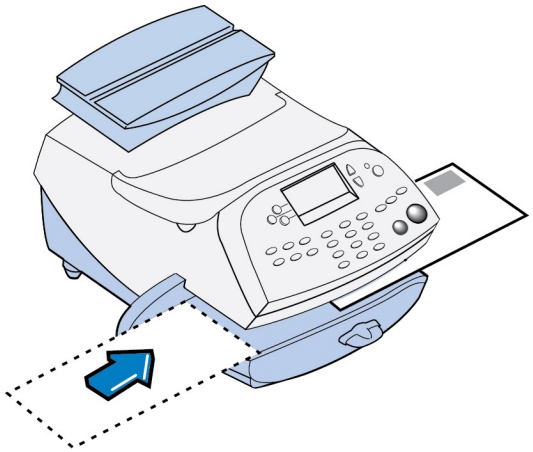

Applying Postage Entering Weight In Manually

This procedure can be used when you already know the weight of a mail piece and you are not using the integrated weighing platform.

1. Press **Weigh/Rate**.
2. Select **Enter Manual Weight**.
3. Key in pounds and select **Set Pounds** (maximum is 70 lbs.).
4. Key in ounces and select **Set oz and Continue**.
5. Select the desired class by pressing the key next to the class name (use the scroll keys to see additional classes).
6. If there is no value next to the class name, more information is needed. Follow the prompts for the options and/or services available for this class of service. The last screen is usually "Services" and lists special services such as COD and Insurance. If you are unsure if a particular class is valid for your mail piece, call your local post office or visit www.pitneybowes.com.
7. Select **Done** when finished entering all the class options and fees.

8. If using the moistener, place flap along moistener and move towards the right.

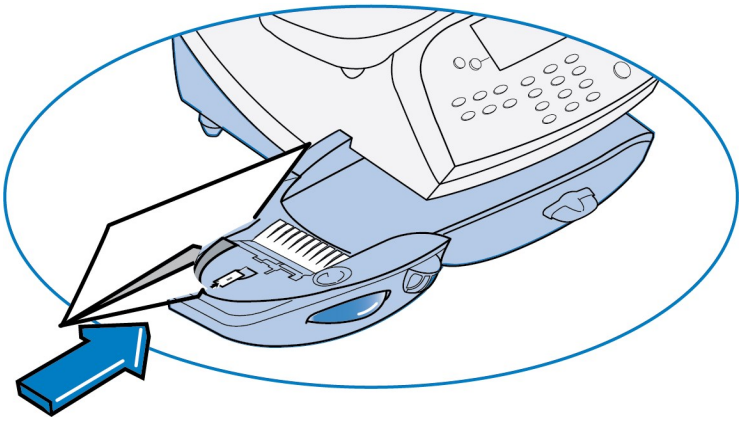

9. Place the envelope/tape sheet up against the registration wall of the system and slide it to the right until the system grasps it.

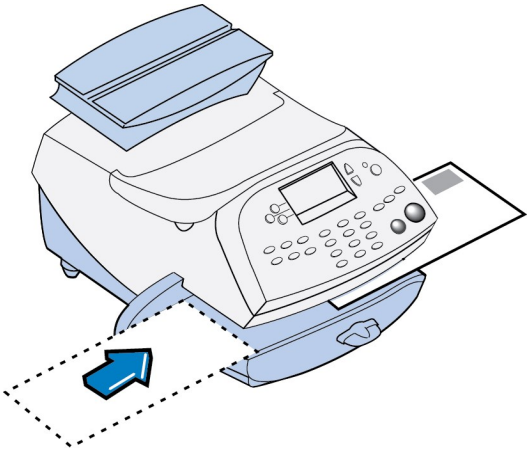

Applying Postage Using The Weighing Platform

1. Make sure scale is activated (you will see “0lb. and 0.0oz” next to the "Scale" on the display). See *Turning Scale On or Off* to turn your scale on if necessary.

2. Place mail piece on weighing platform. The weight of the mail piece will appear on the top-line of the display and valid classes and rates for this weight are displayed.

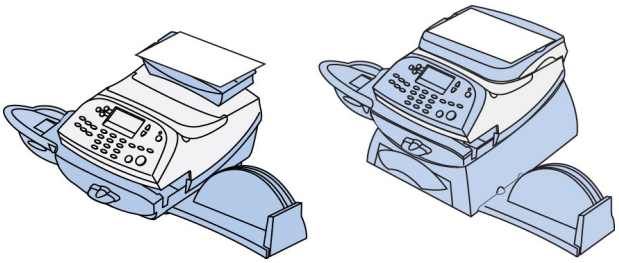

3. Select the desired class by pressing the key next to the class name (use the scroll keys to see additional classes). If you are unsure if a particular class is valid for your mail piece, call your local post office or www.pitneybowes.com.
4. If there is no value next to the class name, more information is needed. Follow the prompts for the options and/or services available for this class of service. The last screen shows "Services" and lists special services such as COD and Insurance.
5. Select **Done** when finished entering all the class options and fees.
6. If using the moistener, place flap along moistener and move towards the right.

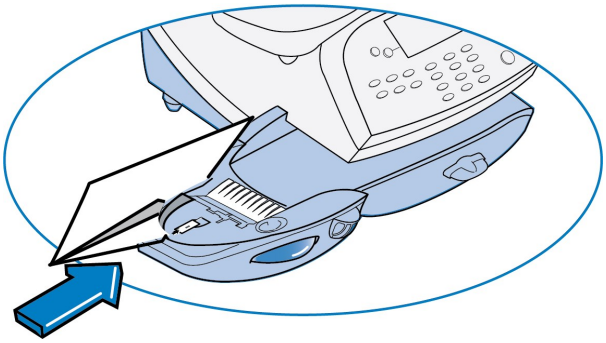

7. Place the envelope up against the registration wall of the system and slide it to the right until the system grasps it. The system prints the meter stamp and ejects the envelope/tape sheet.

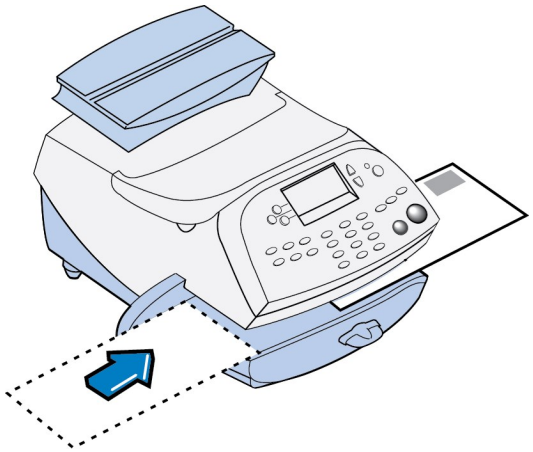

Apply Postage Using Differential Weighing Mode

Differential weighing is an optional feature that allows you to place multiple items on the scale, remove one item at a time, rate that item, and put postage on it. This is repeated until you have finished all of the items on the scale. This procedure is usually done when you have multiple mail pieces with different weights but all using the same class for rating.

1. Press **Weigh/Rate**.
2. Select **Diff. weighing**.
3. Place all items on the scale.
4. Select the desired **class** by pressing the key next to the class name (use the scroll keys to see additional classes).
5. If there is no value next to the class name, more information is needed. Follow the prompts for the options and/or services available for this class of service. The last screen is usually "Services" and lists special services such as COD and Insurance. If you are unsure if a particular class is valid for your mail piece, call your local post office or visit www.pitneybowes.com.
6. Select **Done** when finished entering all the class options and fees.
7. Remove one item from the scale.

8. A ready to print postage screen displays, which includes the rating class you've chosen and piece weight of the item removed.
9. If using the moistener, place envelope flap along moistener and move towards the right.
10. Place the envelope/tape sheet up against the registration wall of the system and slide it to the right until the system grasps it. The system prints the meter stamp and ejects the envelope/tape sheet.
11. Repeat steps 7 -10 for each item that needs postage.
12. When you have removed the last item from the scale, the "LAST ITEM" screen displays.

```
        LAST ITEM
◀Rate this item
◀Exit Diff. Weighing
◀Continue
```

Rate this item – select this option if you want to rate the last piece removed. A ready to print postage screen displays. Follow Steps 8-11 above. The Home screen displays when you are done.

Exit Diff. Weighing – select this option if you want to exit this mode without rating the last item. The Home screen displays.

Continue – select this option if you want to continue rating more items with the same rate. A "Place mail on scale" screen displays. Follow Steps 7-11 above to continue.

This page intentionally left blank.

5 - Using Batch Count Feature

Viewing the Batch Mail Count 41
Printing the Batch Count 42
Clearing the Batch Count 42

Viewing the Batch Mail Count

Your system can keep track of batches of mail. You can use this feature to track the amount of mail going out per day, per week, per month, etc. The system stores the postage value and piece count information in a "batch register".

To view the batch count:

1. Press **Funds**.
2. Press **Page Down**.
3. The display shows the batch information.

Funds Report Description
Batch Count: The number of mail pieces that had postage applied since the last time the batch count was cleared.
Batch Value: The amount of postage applied since the last time the batch value was cleared.

4. To clear the batch count, refer to *Clearing the Batch Count*. or press **Home** to return to the Home screen.

Printing the Batch Count

1. Press **Funds**.
2. Press **Page Down** twice and select **Print Funds Report**.
3. At the "Please insert envelope or tape sheet to print report" prompt, place the envelope/tape sheet up against the back wall of the system and slide it to the right until the system grasps it. The Funds Reports is printed and the envelope/tape strip is ejected.
4. Press **Home** to return to the Home screen.

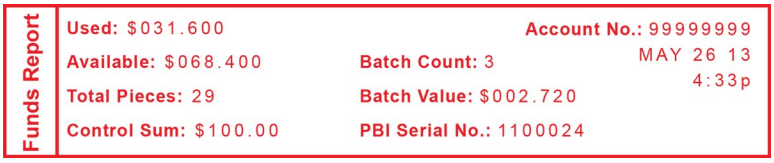

Funds Report Description
Used: The total of all postage ever used in the meter.
Available: The amount of postage remaining in the meter.
Total Pieces: The total number of mail pieces run through the machine that had postage applied.
Control Sum: The total of all postage refills for the meter and equals the amount Used plus Available. This is a postal requirement that verifies an accurate accounting of the postage in your meter.
Batch Count: The number of mail pieces that had postage applied since the last time the batch count was cleared.
Batch Value: The amount of postage applied since the last time the batch value was cleared.
PBP Serial No: The serial number of this meter (normally meter number).

Clearing the Batch Count

IMPORTANT: Make sure you really want to clear the batch count; once you do, you can't restore the data.

1. Press **Funds**
2. Press **Page Down** and select **Clear batch values**.
3. At the "Confirm Clear" prompt, press **Yes/Enter** to confirm. The batch value and batch piece registers return to zero
4. Press **Home** to return to the Home screen.

6 - Maintenance

Ink Cartridge Replacement Messages....45
Printing a Test Pattern....45
Purging the Print Heads....46
Replacing the Print Head....47
Replacing the ink cartridge....51
Filling the moistener tank....56
Cleaning the Moistener Brush....57
Cleaning the moistener wick and holder....58

Ink Cartridge Replacement Messages

NOTE: Please be sure to keep a spare ink cartridge on hand at all times.

Your actual ink usage will vary, depending on whether you routinely print ads, the number of pieces of mail you print a day and other factors. The following messages regarding ink supply status appear on the machine display:

"Low Ink"

Replace the ink cartridge soon. You can print about another 300 impressions or leave the system running for six days without printing. If you don't have a replacement cartridge on hand, you should order one now. Refer to the Contact List for information on ordering supplies.

"Ink Out"

Replace the ink cartridge immediately. The ink supply is gone you will not be able to print any postage.

Order Ink

Printing a Test Pattern

The test print allows you to print a test pattern to see if the print head is functioning properly or you have enough ink in the cartridge.

1. Press **Options**.
2. Press **Page Down** twice.
3. Select **Advanced Features**.
4. Select **Maintenance mode**.

5. Select **Printer maintenance**.
6. Select **Test Print**.
7.
   - The test pattern should look like the sample below **Good Test Print** (no missing lines). If it does then press **Enter/yes**.

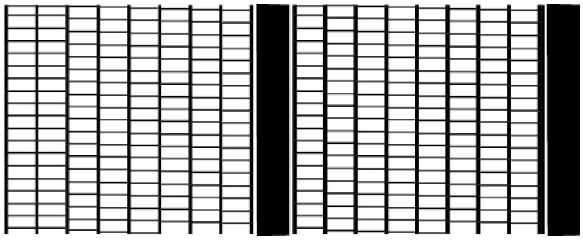

   - If the test pattern looks like the sample below **Poor Test Print**(missing lines), press **No**The machine will execute a print head cleaning. When complete you will be returned to the PM maintenance menu.

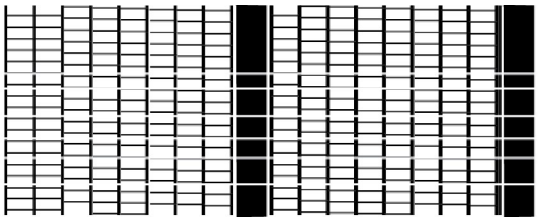

Purging the Print Heads

If you get a poor test print pattern, purge the printer heads to see if this fixes the problem.

1. Press **Options**.
2. Press **Page Down** twice.
3. Select **Advanced Features**.
4. Select **Maintenance mode**.
5. Select **Printer maintenance**.

6. Select **Purge**.
7. You have a choice of 4 purges to use. Normally selecting **Purge A** is sufficient to purge the system, unless directed by a Pitney Bowes agent to do otherwise.
8. The system executes a purge. This may take a few moments. When finished, you return to the Purge screen.
9. Press **Clear** (back arrow key) 5 times to return to the Home screen.

Replacing the Print Head

IMPORTANT: This procedure should only be done under the direction or with the permission of a Pitney Bowes representative. This procedure can also be used to reseat the print head in response to a possible error condition.

If you are still experiencing poor print quality after *purging the print head*, you can replace the print head.

1. Remove the weighing platform (if you are using one) by lifting it straight up.
2. Open the top cover.

3. Select **Replace Ink Tank** on the display. This moves the printhead and ink tank cartridge into position.

4. Unlatch the ink tank cartridge guard by sliding the green lever to the right and flipping the guard open.

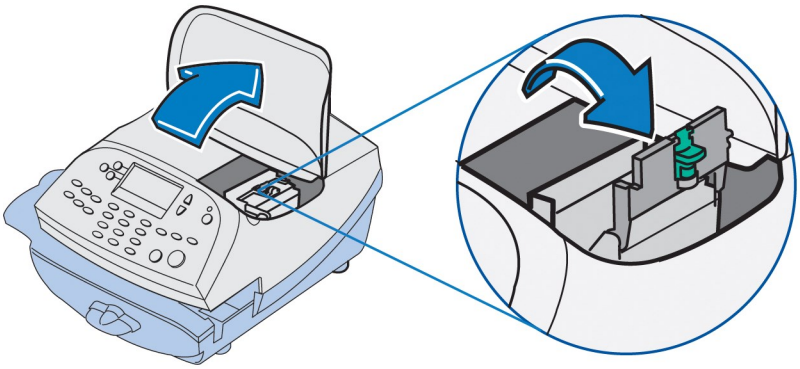

5. Lift up and remove the ink tank cartridge.

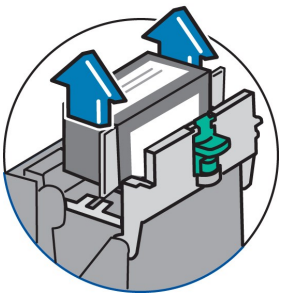

6. Squeeze in on the two gray tabs on either side of the print head so that they slide toward each other.

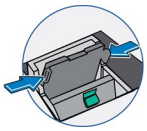

7. While squeezing, lift and tilt the print head to the right toward the space for the ink tank cartridge. The print head should come up out of the machine.

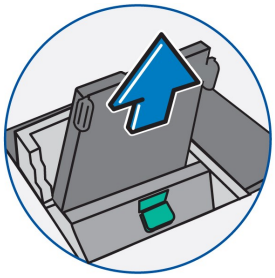

8. Remove the new print head from packaging.

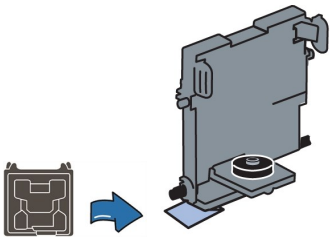

9. Remove the protective tape or the black cap from the bottom of the new print head.

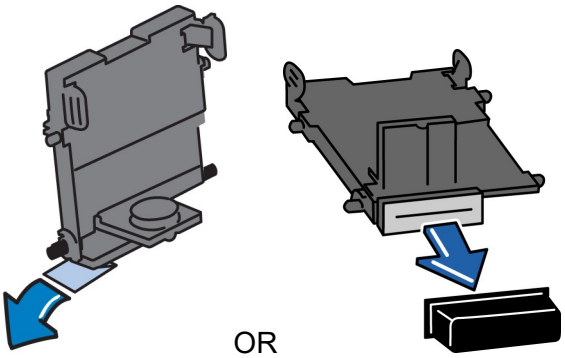

10. Squeeze the two gray tabs on either side of the new print head and slightly angle the print head while pushing the print head flush against the wall.

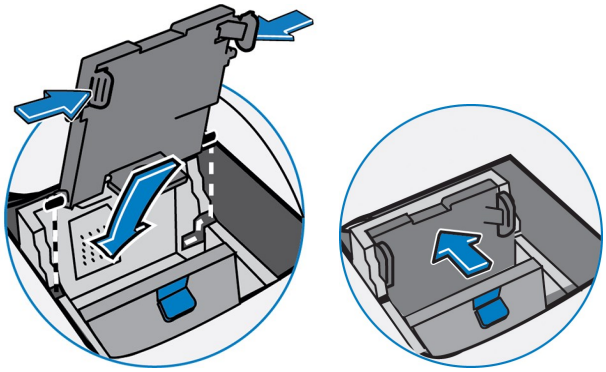

11. Replace the ink cartridge, see *Replacing the Ink Tank Cartridge* if you need assistence.

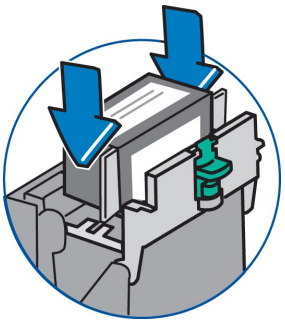

12. Close the top cover and reposition the weighing platform, if you are using one. The machine resets and you return to the Home screen.

Replacing the ink cartridge

Try replacing the ink cartridge to improve the print quality.

1. If present, remove the scale by lifting it straight up.

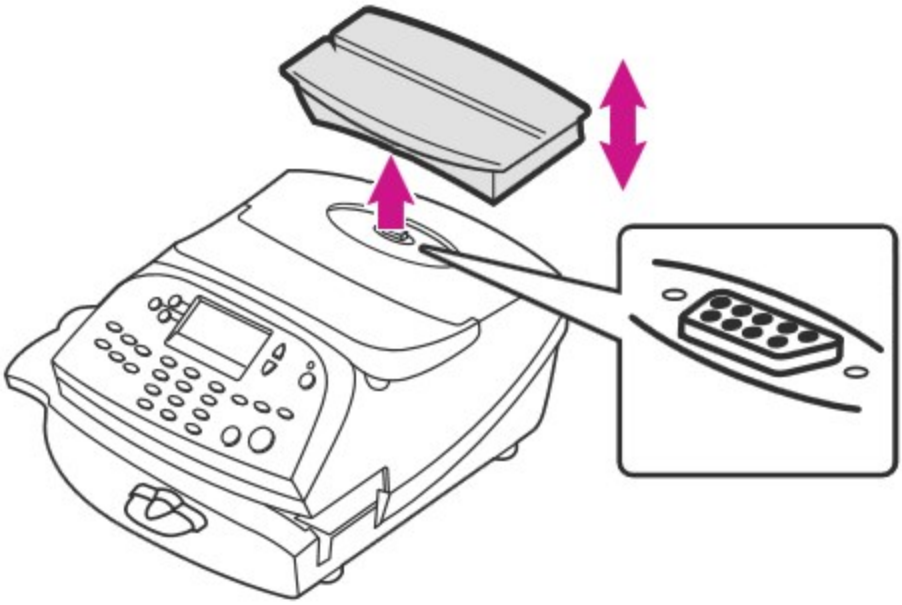

2. Open the top cover.

3. Select **Replace Ink Tank** from the menu.

4. Open the ink tank cartridge guard by sliding the green lever to the right and flipping the guard open.

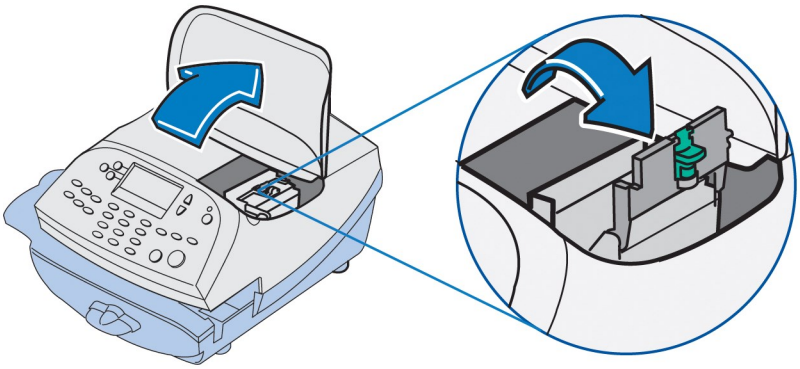

5. Lift up the ink cartridge and remove it from the machine.

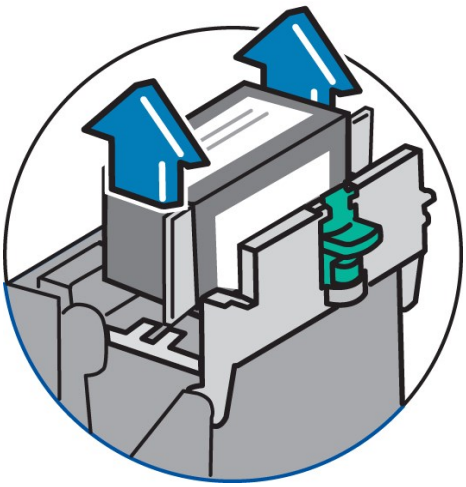

6. Remove the tape from the bottom of the new ink cartridge.

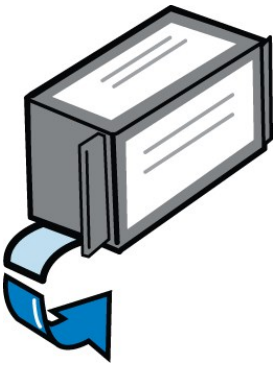

7. Lower the ink cartridge into the cavity so that the label on the top of the cartridge faces the front of your system. The ridges on either side of the ink cartridge slide into the grooves.

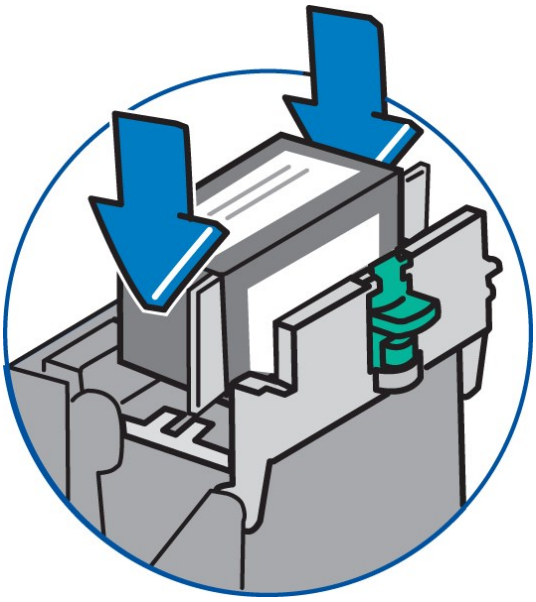

8. Close the ink cartridge guard latch and click to secure. Caution: Excessive force may break the green tip of the lever.

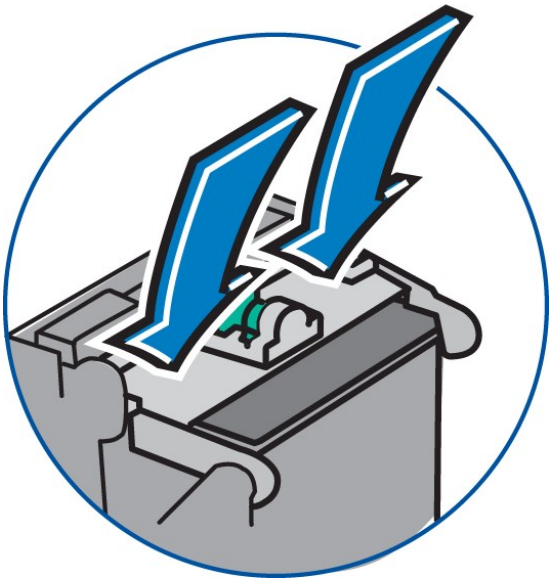

9. Close your cover. Your meter automatically recognizes the new ink cartridge and returns to the Home screen after a few minutes.
10. Re-seat your scale, if necessary.

Only use postal approved ink cartridges, as non-postal approved cartridges can damage your meter. If you need ink, order a genuine Pitney Bowes replacement ink cartridge:

Order Ink

Filling the moistener tank

Refer to the following procedure to refill the moistener.

1. Check the moistener tank to see how much sealing solution is left.

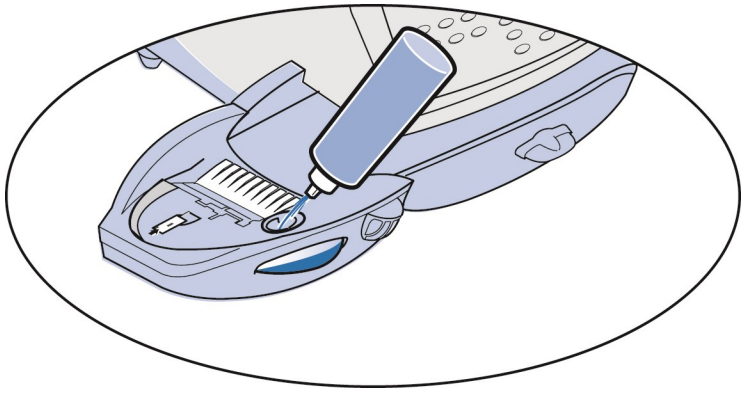

2. Add enough E-Z Seal® to bring the sealant level up to the bottom of the fill hole. We recommend E-Z Seal because it helps keep your moistener clean and improves sealing efficiency. Refer to the *Pitney Bowes Contact List* to order E-Z Seal.
3. If the tank was empty, allow 30 minutes for the moistener brush and wick to get completely wet.

NOTE: Do not overfill the moistener tank.

Cleaning the Moistener Brush

1. Push down on the blue release lever on the moistener.

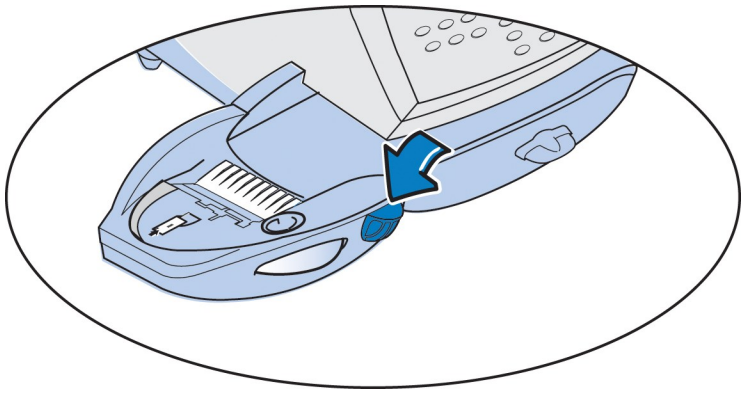

2. Pull the moistener straight out to the left away from the machine.

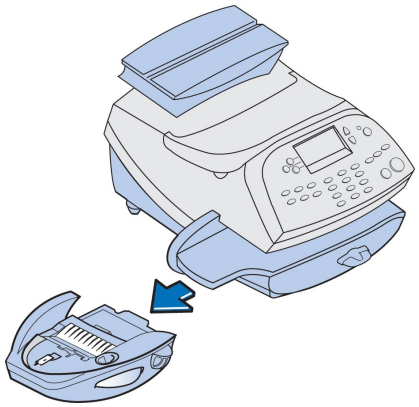

3. Open the hinged brush holder.

4. Grasp the bristles and slide the brush out of the hinged brush holder, toward the front of the moistener tank.

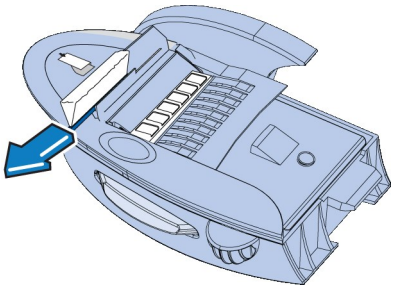

5. Clean the brush in plain water, and rinse thoroughly. Blot the brush with a paper towel to remove excess water.

6. Position the brush as shown at right so its bottom edge is under the mounting tabs and slide the brush back toward the rear of the moistener.

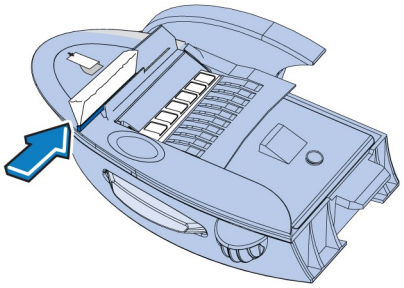

7. Reinstall the moistener. Push down on the blue release lever on the moistener and guide the moistener back onto the machine. You should hear a click as it engages.

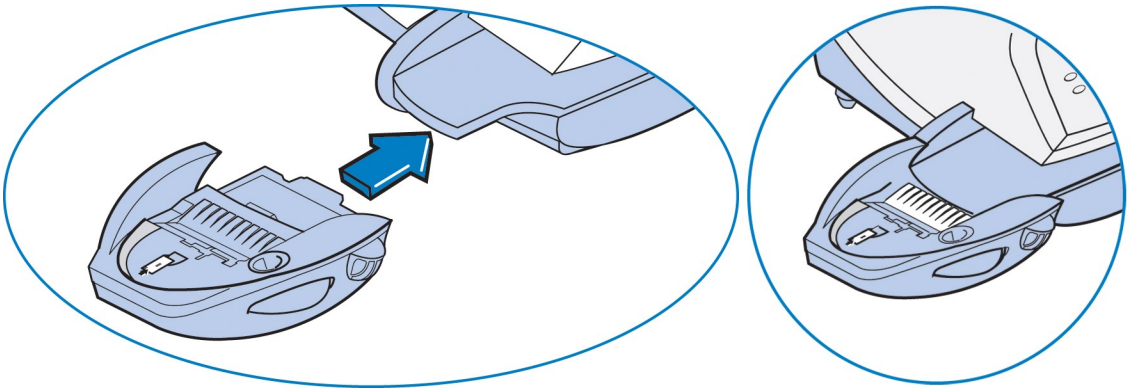

Cleaning the moistener wick and holder

Your optional in-line moistener applies E-Z Seal® solution to the envelope flap. Clean your moistener brush and wick if your moistener tank is full and sealing is incomplete.

1. Push down on the blue release lever on the moistener.

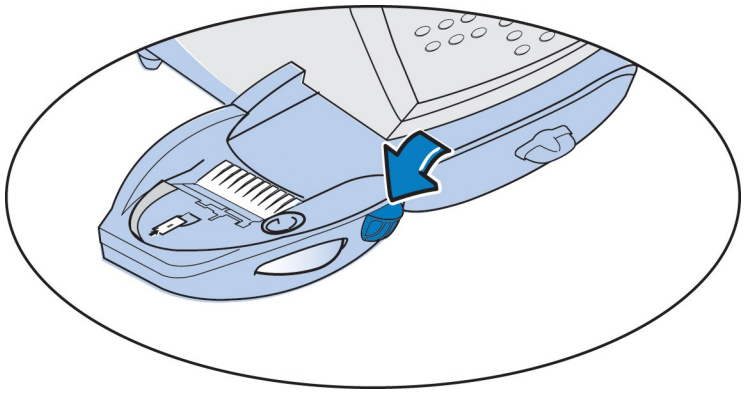

2. Pull the moistener straight out to the left away from the machine.

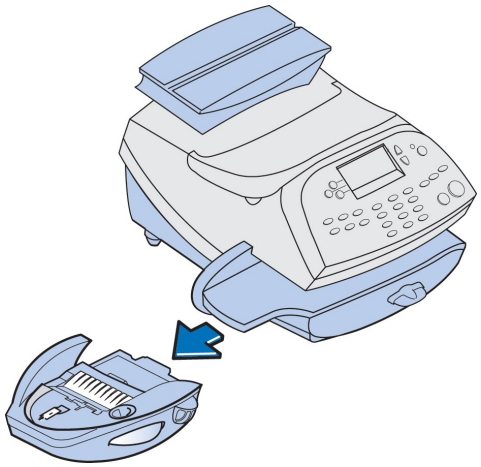

3. Pull up to remove the holder and wick from the moistener.

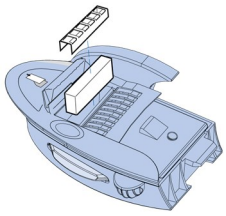

4. Separate wick from metal holder.
5. Clean the wick in plain water, and rinse thoroughly. Blot the wick with a paper towel to remove excess water.
6. Reinstall the wick back in the holder.
7. Reinstall the wick and holder assembly into moistener. Be sure the holder is seated against the top of the wick.

8. Reinstall the moistener.
   a. Push down on the moistener's blue release lever.
   b. Slide the moistener back onto the machine. You hear an audible click when it engages.

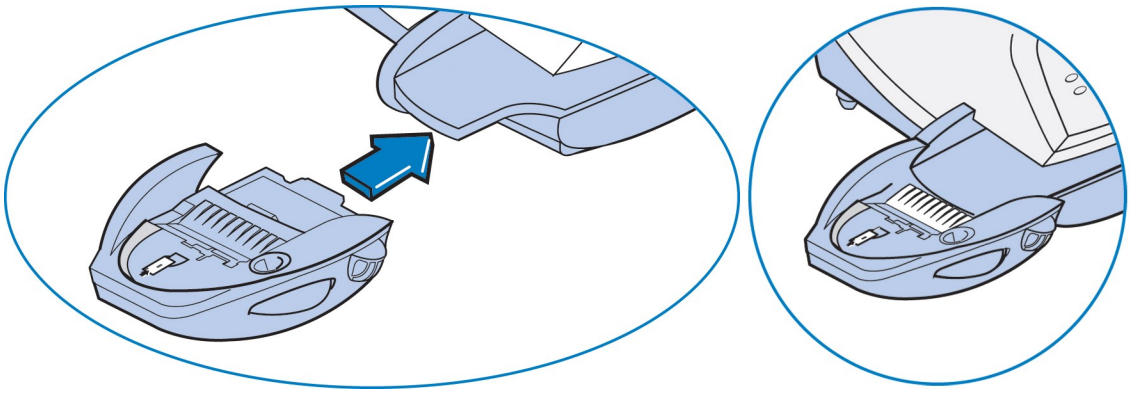

If you need further assistance, please contact us.

This page intentionally left blank.

7 - How to Enter Text

About Entering Text 63

About Entering Text

When is Text Entry Used?

Text is entered for these functions:

- International mail (selecting a country)
- Entering Canada and UK Postal Codes
- Naming a Custom Preset
- Naming an Account in the Departmental Accounting feature

How is Text Entry Done?

Text entry is done via the numeric keypad in a fashion similar to current cell phone text entry. Each key, 2 through 9, has three or four letters displayed above it.

There is no dedicated key to switch between alpha and numeric mode. On those screens (and only those screens) where either an alpha or numeric character may be entered (e.g. preset names, postal codes, account names), press a numeric key to cycle through the 4 possibilities for that key. For example, pressing the “2” numeric key cycles through "2" - "A" - "B" - "C". Extended character sets are provided for foreign markets on a country-by-country basis. In those cases, a numeric key may be pressed more than four times to cycle through the complete character set associated with a key.

If you wish to enter two consecutive alpha characters that are located on the same numeric key (such as “DE”), you must wait for the cursor to automatically move right to the second character’s position before entering the second character. There is about a 1-second delay following an alpha entry before the cursor moves one position to the right.

Postal Codes

In postal codes, all alpha characters are uppercase. For non-US postal codes that follow a fixed format of alpha and numeric characters, only the appropriate alpha or numeric in each specific position is allowed.

Custom Preset Names and Account Names

For Preset names, and Account names, the first letter of the first word automatically defaults to uppercase.

Special Characters

Special characters are accessed by repeatedly pressing the “1” key. Special characters include:

Item			Description
,	Comma	!	Exclamation point
*	Asterick	@	At sign
.	Period	+	Plus sign
:	Colon	#	Number sign
$	Dollar sign	^	Carrot
-	Minus sign (dash)	=	Equals
?	Question mark	&	Ampersand
/	Forward slash	%	Percent
\	Back slash	_	Underscore
(	Open parenthesis	"	Quotation mark
)	Close parenthesis		

The zero (0) key on the keypad functions as the space key. The word “Space” is printed on the machine to indicate this.

The decimal point key (.) functions as the Shift key. The word “Shift” is printed on the machine to indicate this. This key toggles between “all uppercase letters” and “all lowercase letters.” The current mode is presented on line 4 of the display. ABC to indicate the uppercase mode, or abc to indicate the lowercase mode.

This page intentionally left blank.

8 - Accounting

About Accounts 67
Turning Accounts On and Off 67
Creating an Account 68
Editing Account Name and Password 69
Selecting an Account 69
Viewing Account Totals 70
Printing a single account report 70
Printing a Multi-Account Summary Report 71
Clearing All or Some of the Accounts 72
Deleting an Account 72
Turning On Account Passwords Globally 73
Turning Off Account Passwords Globally 74

About Accounts

The accounting feature on your machine allows you to track your postage costs by categories. These categories can represent whatever is appropriate for your organization - departments, people, locations, projects, etc. Tracking your mailing expenses by category allows you to manage and budget your postal costs in a more efficient manner.

The system provides the following accounting options:

- A name up to 12 alphanumeric characters long.
- An account number.
- The item total. This is the total number of pieces of mail charged to an account since it was last cleared.
- The value total. This is the total amount of postage charged to an account since it was last cleared.
- An account password (if set up) can run enhanced accounting features

Turning Accounts On and Off

Turning Accounts On

1. At the home screen, press **Options**.
2. Press **Page Down** and select **Turn items ON/OFF**.
3. Select **Accounting**
4. Select **Standard Acct**. If the supervisor password has been enabled, you are prompted to enter it. Key in the 4-digit password and select **Continue**.

5. The next screen shown depends on your machine settings:

   If accounts have been established already – Select **Select an account**.

   If no accounts have been established – you are prompted to create an account. Refer to *Creating an Account*.

6. The "Select an Account" screen displays. Press **Page Down** (if lit) to see more choices. To select an account:

   A. Key in the first digit of the account number if you know it and press **Yes/Enter**, OR

   B. Use the appropriate selection key next to the display.

7. You return to the Home screen with the name of the account .

Turning Accounts Off

NOTE: You will not be tracking postage by account when this feature is turned off.

1. From the Home screen select **ACCT**.
2. Press **Page Down** twice.
3. **Select Turning accounting OFF**. If the supervisor password has been enabled, you are prompted to enter it. Key in the 4-digit password and select **Continue**.
4. You return to the Home screen with no account displayed.

Creating an Account

To create an account to track postage.

1. From the Home screen select **ACCT**.
2. Select **Create an account**. If a Supervisor password has been enabled, you are prompted to enter one. Key in the 4-digit password if necessary and select **Continue**.
3. The system prompts you for the name of this account. Key in a name for the account. It can be up to twelve alpha/numeric characters long. To access alpha characters, tap the appropriate number key until the desired character displays. When finished, select **Continue**.

4. If passwords have been enabled for accounts, you get prompted to enter one.
   a. Key in the 4-digit password and select **Continue**.
   b. At the confirmation password prompt, re-enter the new password and select **Set**.
5. At the prompt to create another account, either
   a. Press **Yes/Enter** and go back to Step 3 to enter another account, OR
   b. Press **No** to continue. You return to the Accounts menu.
6. Press **Clear** (back arrow key) or **Home** to return to the Home screen.

Editing Account Name and Password

You can edit an account name and establish passwords for each account if you wish.

1. From Home screen, press the selection key next to **ACCT** line to display the Accounts menu.
2. Press **Page Down** and select **Edit an account**.
3. If the supervisor password has been enabled, you are prompted to enter it. Key in the 4-digit password and select **Continue**.
4. The **Edit an Account** screen displays (a sample is shown below). Press **Page Down**(if lit) to see more choices.

   To select an account:
   A. Key in the first digit of the account number if you know it and press **Yes/Enter**, OR

   B. Use the appropriate selection key next to the display.
5. If a password has been assigned to this account, you will be prompted to enter one. Key in the 4-digit password and select **Continue**.

Selecting an Account

You need to select an account to track postage when using Departmental Accounting.

1. From Home screen, press the selection key next to **ACCT:** line to display the Accounts menu.
2. Select **Select an account**

3. The **Select an Account** screen displays. Press **Page Down** (if lit) to see more choices.
   To select an account:
   A. Key in the first digit of the account number if you know it and press **Yes/Enter**, OR
   B. Use the appropriate selection key next to the display.
4. If a password has been assigned to this account, you will be prompted to enter one. Key in the 4-digit password if necessary.
5. You return to the Home screen with the name of the account listed.

Viewing Account Totals

You can view your account totals anytime using this option.

1. From Home screen, press the selection key next to **ACCT:** line to display the Accounts menu.
2. Press **Page Down** and select **Display acct totals**.
3. The **Display an Account** screen displays. Press **Page Down** (if lit) to see more choices.

   To select an account:
   A. Key in the first digit of the account number if you know it and press **Yes/Enter**, OR
   B. Use the appropriate selection key next to the display.
4. The account number, name, pieces, and value of the postage used displays. Select **Continue**.
5. You have a choice to either view another account, clear the account, or exit.
   A. Select **View another acct** and go back to Step 3 to enter another account to view.
   B. Select **Clear this account** if you want to clear account totals. If your system has been set up to require a supervisor or account password, you are prompted to enter it. The "Clear an Account" screen displays and you continue with Step 3 from *Clearing an Account*.
   C. Follow the prompts to exit this screen if you are finished.
6. Press **Home** to return to the Home screen.

Printing a single account report

Print a single account report to create a record of the number of pieces run and the amount of postage used since the account was last reset. Run this report only if the Departmental Accounting feature is set up on your system.

Follow these steps to print a single account report:

1. Press **Reports**.
2. Select **Printable report** (for DM100i and DM200L only).
3. Select **Single Accounts Rpt**.
4. Enter the account number.
5. When prompted, insert tape sheet or envelope into the meter.
6. The meter returns to the Printable reports menu once the report prints.
7. Press **Clear** (back arrow key) to return to Report type menu, or press **Home** to return to the Home screen.

If you need further assistance, please contact us.

Important: This only applies to meters with the optional Standard Accounting package. Contact your Pitney Bowes sales representative for information about options and pricing.

Printing a Multi-Account Summary Report

This report provides the postage amount and number of pieces applied for a multiple accounts (if the Departmental Accounting feature is set up on your system).

To print an account report:

1. Press **Reports**.
2. Select **Printable report**.
3. Select **Multi Acct Summary**.
4. When prompted, insert tape sheet or envelope into machine. The report is printed and you return back to the Printable reports menu.

5. Press **Clear** (back arrow key) to return to Reports menu or press **Home** to return to the Home screen.

Clearing All or Some of the Accounts

You can clear the postage totals on an account when necessary (for example, at the end of a fiscal year).

IMPORTANT: Make sure you really want to clear an account. Once you do, the account information is gone. We suggest you print an accounting report first, see *Printing a Multi-Account Summary Report* before clearing.

1. From Home screen, press the selection key next to **ACCT:** line to display the Accounts menu.
2. Press **Page Down** and select **Clear an account**. If a Supervisor password has been enabled, you get prompted to enter one. Key in the 4-digit password if necessary.
3. The **Clear an Account** screen displays. Press **Page Down** (if lit) to see more choices. To select an account:
   a. Key in the first digit of the account number if you know it and press **Yes/Enter**, OR
   b. Use the appropriate selection key next to the display.
4. At the confirm clear prompt, press **Yes/Enter** (or **No** if you change your mind). The account clears and you return to the Accounts menu.

Deleting an Account

You can delete an account when necessary (for example, at the end of a fiscal year).

IMPORTANT: Make sure you really want to delete an account. Once you do, the account information is gone. We suggest you print an accounting report first before deleting, see *Printing a Multi-Account Summary Report*.

1. From Home screen, press the selection key next to **ACCT:** line to display the Accounts menu.
2. Select **Delete an account**. If a Supervisor password has been enabled, you are prompted to enter one. Key in the 4-digit password if necessary.
3. The **Delete an Account** screen displays. Press **Page Down** (if lit) to see more choices.

   To select an account:

   A. Key in the first digit of the account number if you know it and press **Yes/Enter**, OR

   B. Use the appropriate selection key next to the display.
4. At the confirmation prompt to delete the account selected, press **Yes/Enter** to delete (or **No** if you change your mind).

Turning On Account Passwords Globally

You can turn on the requirement for all operators to enter passwords when choosing an account.

NOTE: You need to set up a Supervisor password, see *Setting Up or Disabling the Supervisor Password* before you can enable Account passwords.

NOTE: You need to establish a password for each account to complete the process.

1. From Home screen, press the selection key next to **ACCT:** line to display the Accounts menu.
2. Press **Page Down** twice and select **Acct Passwords**.
3. Select **Turn Passwords ON**. You return back to the Accounts menu.
4. Select **Select an account**.
5. The **Select an Account** screen displays (a sample is shown below). Press **Page Down** to see more choices (if lit). To select an account you may either:

   A. Key in the first digit of the account number if you know it and press **Yes/Enter** OR

   B. Use the appropriate selection key next to the display.

6. You return to the Home screen with the name of the account listed.
7. Continue with **Creating an Account** later in this chapter to set up accounts with passwords.

Turning Off Account Passwords Globally

You can turn off the requirement for operators to enter passwords (if passwords are set up) when choosing an account.

1. From Home screen, press the selection key next to **ACCT:** line to display the Accounts menu.
2. Press **Page Down** twice and select **Acct Passwords**.
3. Select **Turn Passwords OFF**.
4. You are prompted to enter the Supervisor password. Key in the 4-digit password. You return back to the Accounts menu.
5. Press **Clear** (back arrow key) or **Home** to return to the Home screen.

This page intentionally left blank.

9 - Reports

About Reports....77
Printing a Funds Report....78
Printing your Last 5 Refills summary report....79
Rates Summary Report....80
Special Services Report....81
Printing a single account report....82
Printing a Multi-Account Summary Report....83
Configuration Report....84
System Setup Report....84
Account List Report (Standard Accounting)....85
Error code report....85

About Reports

Your machine allows you to view and print reports for funds usage, postage refills, and other valuable data. Some reports are done right from your machine on an envelope or tape sheet, others require an optional attached printer.

For information on printing accounting reports, refer to *Printing an Account Report*.

NOTE: The type of reports available will vary, depending on the options installed on your machine.

Available reports may Include:

- Add Postage Report
- Single Account Report
- Multi-account Summary Report
- Account List Report (laser printer only)
- Special Services
- Register (Funds) Report
- Configuration Report
- Systems Setup Report (laser printer only)
- Error Report
- Rates Summary Report

Printing a Report on an Envelope or Tape Strip

1. Press **Menu**.
2. Select **Reports**.
3. **Select the report** you wish to print from the list. You may need to press the down arrow key to view additional reports.
4. If you have an attached printer, you will need to select **Mailing Machine**.
5. Place an envelope or tape strip up against the back wall and slide it to the right until the machine grasps it. If you are printing a multi-page report you will be prompted to insert another envelope or tape sheet.
6. Once printing is complete you will be prompted to print another report. You can choose **Yes** to print another report or **No** to return to the Home screen.

Printing a Report Using a Laser Printer

1. Press **Menu**.
2. Select **Reports**.
3. **Select the report** you wish to print from the list. You may need to press the down arrow key to view additional reports.
4. When prompted, select **Attached Printer**.
5. A message appears indicating that the report will be printed to the attached printer. Select **Returen to Reports Menu** to continue.

Printing a Funds Report

Print a Funds Report to create a record of how much postage has been used and how much is remaining in the machine.

1. Press **Reports**.
2. Select **Printable report**.
3. Press **Page Down**.
4. Select **Register Report**.
5. When prompted, insert tape sheet or envelope into the machine. The report prints and the screen returns to the Printable Reports menu.

6. Press **Clear** (back arrow key) to return to the Reports menu, or press **Home** to return to the Home screen.

Funds Report			
	Used: $031.600		**Account No.:** 99999999
	Available: $068.400	**Batch Count:** 3	MAY 26 13 4:33p
	Total Pieces: 29	**Batch Value:** $002.720	
	Control Sum: $100.00	**PBI Serial No.:** 1100024	

Your Funds Report contains the following pieces of information:

- **Used:** The total amount used over the lifetime of the meter.
- **Available:** The amount currently available to print.
- **Total Pieces:** The total number of pieces run over the lifetime of your meter.
- **Control Sum:** The total of the amount used and available.
- **Batch Count:** The current Batch Count.
- **Batch Value:** The current Batch Total.
- **PBI Serial No.:** The serial number of your meter.
- **Account No.:** The Postage by Phone account number.
- The date and time you printed your report.

Printing your Last 5 Refills summary report

1. Press **Reports**Last 5 Refills.
2. Select **Printable report**.
3. Select **Add Postage Report**.
4. When prompted, insert tape sheet or envelope into your machine. Your machine prints your **Last 5 Refills** summary report.
5. Press **Home** to return to the Home screen

Last 5 Refills	Date of Refill:	Time:	Refill Amount:	Account No: 99999999
	MAY 23 09	10:25A	$100.000	Meter No: 1100024
	APR 15 09	4:29P	$050.000	Printed: MAY 26 09
	APR 02 09	9:04A	$075.000	
	MAR 15 09	12:29P	$200.000	
	FEB 23 09	11:32A	$100.000	

Your Last 5 Refills summary report contains the following pieces of information:

- **Date of Refill:** The date of the postage refill.
- **Time:** The time of the refill.
- **Refill Amount:** The amount of the postage refill.
- **Account No:** Your PB Postage account number.
- **Meter No:** The serial number of your meter.
- **Printed:** The date you printed your report.

If you need further assistance, please contact us.

Rates Summary Report

The Rates Summary Report provides a summary of the active rate files in your system.

After you update your meter's rates by downloading rates or ZIP/Zone data to the meter, print a Rates Summary Report to confirm that your update was successful.

1. Press **Reports**.
2. Select **Printable reports**.
3. Press **Page Down**.
4. Select **Rates Summary Rpt.**.
5. When prompted, insert tape sheet or envelope into the machine. After your report prints, your system returns back to the Printable reports menu.
6. In the report's Effective column, look at the date of the rate change. If the date is not correct, *update your rates* again.

7. Press **Clear** (back arrow key) to return to the **Reports type** menu, or press **Home** to return to the Home screen.

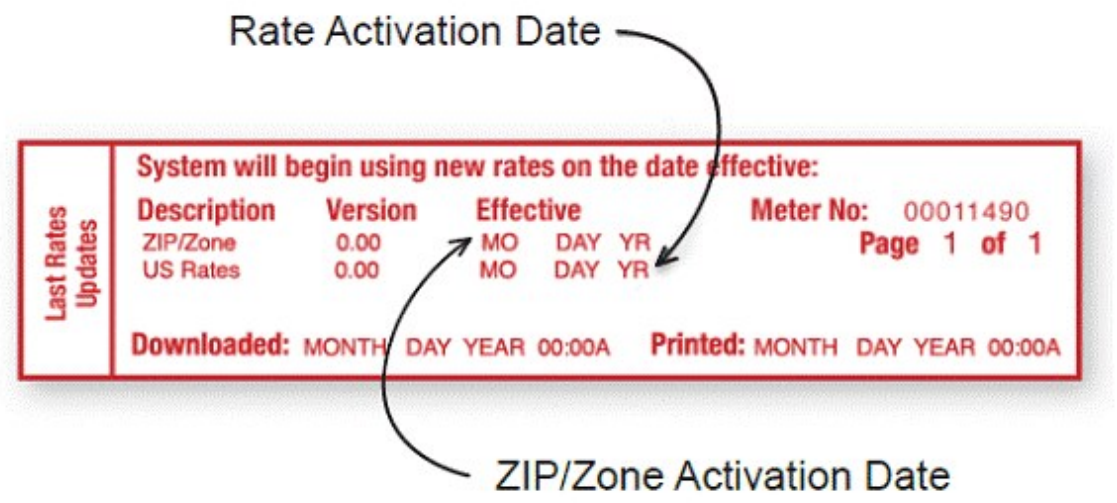

Rates Summary Report data
Description: the specific type of rate.
Version: the alpha-numeric identifier used for this rate.
Effective Date: the date the rate takes effect.
Active: indicates if the rate is active (Yes or No).
Meter Number: the serial number of this meter.

Important

- For multi-page reports, you get prompted to insert another envelope or tape sheet.

Special Services Report

This report is used in conjunction with the optional USPS® Confirmation Services feature It provides a list of the last 20 pieces (by barcode number) that had USPS® Confirmation Services applied to them.

1. Press **Reports**.
2. Select **Printable report**.
3. Select **Special Services**.

4. When prompted, insert tape sheet or envelope into the machine. If it is a multi-page report you will be prompted to insert another envelope/tape sheet.
5. Press **Clear** (back arrow key) to return to the Reports menu, or press **Home** to return to the Home screen.

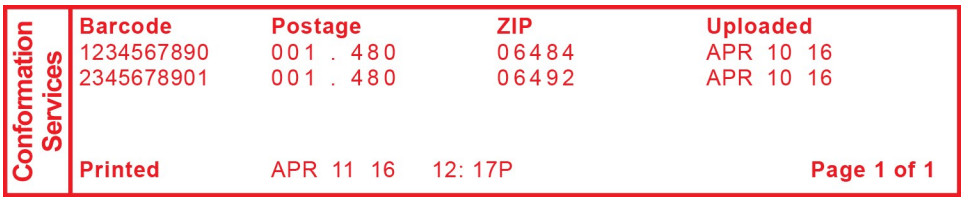

Conformation Services

Barcode	Postage	ZIP	Uploaded
1234567890	001 . 480	06484	APR 10 16
2345678901	001 . 480	06492	APR 10 16

Printed APR 11 16 12: 17P Page 1 of 1

Description
Barcode: the barcode entered when applying the Confirmation Service.
Postage: the total amount of postage applied to this mail piece.
ZIP: the delivery ZIP code of the mail piece.
Uploaded: the date the USPS Confirmation Service record was uploaded to the Pitney Bowes (and later) USPS date Center.
Printed: the date and time the report was printed.

Printing a single account report

Print a single account report to create a record of the number of pieces run and the amount of postage used since the account was last reset. Run this report only if the Departmental Accounting feature is set up on your system.

Follow these steps to print a single account report:

1. Press **Reports**.
2. Select **Printable report** (for DM100i and DM200L only).
3. Select **Single Accounts Rpt**.
4. Enter the account number.
5. When prompted, insert tape sheet or envelope into the meter.
6. The meter returns to the Printable reports menu once the report prints.

7. Press **Clear** (back arrow key) to return to Report type menu, or press **Home** to return to the Home screen.

If you need further assistance, please contact us.

Important: This only applies to meters with the optional Standard Accounting package. Contact your Pitney Bowes sales representative for information about options and pricing.

Printing a Multi-Account Summary Report

This report provides the postage amount and number of pieces applied for a multiple accounts (if the Departmental Accounting feature is set up on your system).

To print an account report:

1. Press **Reports**.
2. Select **Printable report**.
3. Select **Multi Acct Summary**.
4. When prompted, insert tape sheet or envelope into machine. The report is printed and you return back to the Printable reports menu.

5. Press **Clear** (back arrow key) to return to Reports menu or press **Home** to return to the Home screen.

Configuration Report

This report lists configuration information about your machine and Postage By Phone® account. It is generally a report you will not need unless your Pitney Bowes Customer Service Representative requests it.

1. Press **Reports**.
2. Select **Printable reports**.
3. Select **Configuration report**.
4. When prompted, insert tape sheet or envelope into the machine. The report is printed.
5. Press **Clear** (back arrow key) to return to the Reports menu, or press **Home** to return to the Home screen.

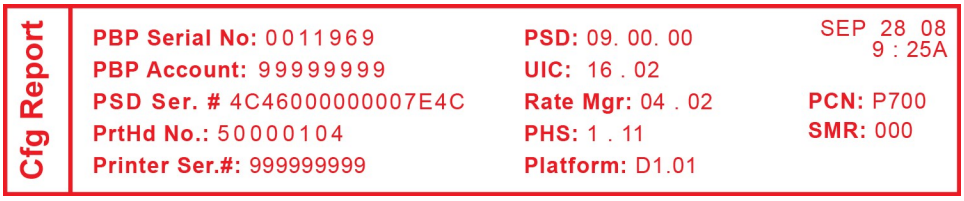

Cfg Report			
	PBP Serial No: 0011969	**PSD:** 09. 00. 00	SEP 28 08 9 : 25A
	PBP Account: 99999999	**UIC:** 16 . 02	
	PSD Ser. # 4C46000000007E4C	**Rate Mgr:** 04 . 02	**PCN:** P700
	PrtHd No.: 50000104	**PHS:** 1 . 11	**SMR:** 000
	Printer Ser.#: 999999999	**Platform:** D1.01	

System Setup Report

This report provides comprehensive information about your machine. This report can only be laser printed, therefore, you must have a laser printer attached to your machine.

1. Press **Reports**.
2. Select **Printable Reports**.
3. Select **System Setup Report**.
4. When prompted, ensure that a laser printer is connected to your system, then select **Continue**.
5. The report prints.
6. Press **Clear** (back arrow key) to return to the Reports menu, or press **Home** to return to the Home screen.

Reports contain:

- Serial numbers
- System versions
- Funds and piece information
- Warning values

- Time settings
- Advertisements
- Inscriptions
- Accounting setup
- Modem setup
- Scale settings
- Presets

Account List Report (Standard Accounting)

This report provides the postage amount and number of pieces applied to all of your accounts (if the Departmental Accounting feature is set up on your system). This report can only be laser printed, therefore, you will need to have a laser printer attched to your machine.

1. Press **Reports**.
2. Select **Printable reports**.
3. Select **Account List Report**.
4. When prompted, ensure that a laser printer is connected to your system, then select **Continue**.
5. The report is printed.
6. Press **Clear** (back arrow key) to return to the Reports menu, or press **Home** to return to the Home screen.

Error code report

This report provides a history of error codes. It is generally a report you will not need unless your Pitney Bowes Customer Service Representative requests it.

1. Press **Reports**.
2. Select **Printable reports**.
3. Select **Error report**.
4. When prompted, insert tape sheet or envelope into the machine. The report is printed.

5. Press **Clear** (back arrow key) to return to the Reports menu, or press **Home** to return to the Home screen.

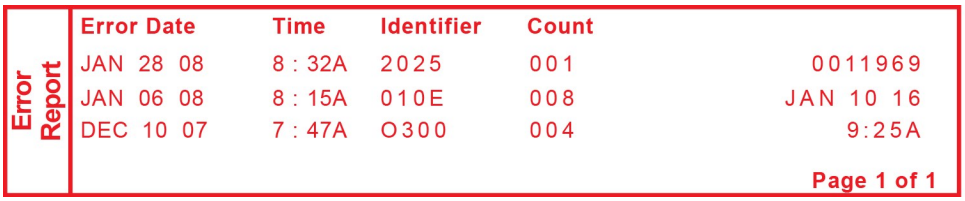

Error Report

Error Date	Time	Identifier	Count	
JAN 28 08	8 : 32A	2025	001	0011969
JAN 06 08	8 : 15A	010E	008	JAN 10 16
DEC 10 07	7 : 47A	O300	004	9:25A

Page 1 of 1

This page intentionally left blank.

10 - Configuring Your Mailing Machine

About System Settings 89
Setting System Time 89
Setting the Contrast of the LCD Display 90
Turning Features On and Off 90
Setting the Date, Time and Timeouts 91
Setting Normal Preset Time 91
Sleep Mode Activation Time 92
Setting Autodate Advance 92
Correct Drift 93
Setting Daylight Savings Time 93
Setting, changing, or disabling a lock code 93
Setting Up or Disabling the Supervisor Password 95
Turning Scale On or Off 96
Setting Scale Options (if using scale option) 96
Zeroing your Scale 96
Setting Weight Change Options 97
Setting Class Change Options 97
Setting the High Funds Warning 98
Setting the Low Funds Warning 98
Enabling Scale Stabilizing 98
Setting Language Preference 99
Install Mode Options 99

About System Settings

You use system settings to customize your machine to accommodate the way you run mail. You can also add security to those features that are sensitive for your organization. System settings include:

Basic Settings

- Setting the machine to the current (today's) date
- Advance the Date
- Adjusting the Contrast (of the display)
- Turning Features On or Off (if installed on machine)
- Setting Date, Time, and Timeouts
- Setting Postage Values (Funds Warnings)
- Setting Lock Code and Passwords
- Scale Options (accessed from the Home screen)
- Checking and Clearing the Batch Count (also refer to Checking Clearing Batch Mail Count)
- Connecting to Data Center settings (also refer to *Connecting to the Data Center*

Advanced Settings

- Manage USPS® Confirmation Delivery Records. Contact Pitney Bowes for more information on this feature, refer to *Pitney Bowes Contact List*.
- Maintenance Mode
- Change Language
- Meter Withdrawal (for withdrawing postage funds)
- Run Install Mode (for special purposes only)

Setting System Time

NOTE: You can change the time back as early as the beginning of the current day, and you can advance the time up to 24 hours (which means you are in the next day).

1. Press **Options**.
2. Select **Set to today's date**. You will be returned to the Home screen with today's date set.

Setting the Contrast of the LCD Display

To adjust the LCD display contrast:

1. Press **Options**.
2. Select **Adjust the Contrast**.
3. Select **Increase Contrast** or **Decrease Contrast**.
4. Press **Clear** (back arrow key) or **Yes/Enter** to return to the Options menu.

Turning Features On and Off

You can turn on and off features that you have already purchased and downloaded into your machine.

Select the feature that you want to turn on or off. You will be prompted to select ON or OFF depending on the current setting of that feature.

Accounting – this turns on or off an accounting option (if purchased).

Account Passwords – this turns on or off the requirement for operators (globally) to enter passwords when choosing a departmental account if accounting passwords are set up. Also, refer to *Accounting*.

Auto-Rating – this turns on or off the auto-rating feature, which calculates the postage amount for a mail piece based on the weight, the class, and services selected.

Special Services – this allows you to customize prompts for the USPS® Confirmation Services feature. Items include:

- Prompt Receipt - turns on or off the prompt to print a receipt after uploading your USPS® Confirmation Services records
- Upload Records - turns on or off the prompt to upload your USPS® Confirmation Services records
- Records Warning - turns on or off the prompt that notifies you when a specified number of USPS® Confirmation Services records has been reached in your system. Key in a number between 1 and 200, and press Yes/Enter.

Preset Class Lookup – this turns on or off the prompt for a class when you are saving a preset that has no class listed (also known as "key-in postage").

Scale Stabilizer – this turns on or off the scale stabilizer feature, which minimizes reactions to scale vibrations. You may use this feature in environments where there is blowing on the scale, accidental bumps to the scale or machine, or dropping of mail onto the scale or machine.

Setting the Date, Time and Timeouts

You can change the system default date/time, date/time to daylight savings time, change the time at which your system advances the date/time to the next day, and set the amount of time your system can remain inactive before reverting to the normal preset values.

Listed are the basic setting options

- Normal Preset, refer to *Setting the Normal Preset Time.*
- Sleep Mode, refer to *Sleep Mode Activation Time.*
- Autodate Advance, refer to *Setting Autodate Advance.*
- Correct drift, refer to *Correcting Drift.*
- Daylight Savings, refer to *Setting Daylight Savings Time.*

Setting Normal Preset Time

The normal preset is a set of values (postage, ad, account and so on) that your machine display automatically returns to after a set period of time. You can set the amount of time the display takes before it reverts to the normal preset.

1. Press **Options**.
2. Press **Page Down**.
3. Select **Time and Timeouts**.
4. Select **Normal Preset**.
5. Key in the amount of minutes (from 1-240) before the system returns to the normal preset.
6. Select **OK**. The display returns to Time and Timeouts menu.
7. Press **Clear** (back arrow key) to return to Options Menu.

Sleep Mode Activation Time

You can set the amount of time the machine waits until entering "sleep mode". When the machine is in sleep mode, the display is blank and you can't process mail. You awaken the machine by merely pressing any button on the control panel.

1. Press **Options**.
2. Press **Page Down**.
3. Select **Time and Timeouts**.
4. Select **Sleep Mode**.
5. Key in the amount of minutes (from 1-240) before the system goes into sleep mode.
6. Select **OK**. The display returns to Time and Timeouts menu.
7. Press **Clear** (back arrow key) to return to Options menu.

Setting Autodate Advance

The feature is factory set to 12:00 AM. This means that at 12:00 AM, the system advances the date of the meter stamp to the new date.

You can set the system to advance the date of the meter stamp at 12:00 PM (afternoon) instead. With this setting, it allows you to meter mail in the afternoon for the next day's mailing if your mail is sent out in the morning.

1. Press **Options**.
2. Press **Page Down**.
3. Select **Time and Timeouts**.
4. Select **Autodate advance**.
5. The following selections appear.

   Switch AM/PM – Use the soft key next to this selection to toggle between "AM or "PM". Select **Continue**.

   Disable – Use the soft key next to this selection to disable the feature and return to using 12:00 AM as the time when the machine advances the date of the meter stamp.
6. The display returns to Time and Timeouts menu.
7. Press **Clear** (back arrow key) to return to Options menu.

Correct Drift

Sometimes, the time on the machine may need to be adjusted due to internal "drift" or the activation of Daylight Saving Time.

1. Press **Options**.
2. Press **Page Down**.
3. Select **Time and Timeouts**.
4. Press **Page Down**.
5. Select **Correct Drift**.
6. You have your choice of adding or subtracting minutes from the current time displayed.

   To Add Minutes – Select **Add 1-120 min** to add minutes.
   Key in the number of minutes you need to add and select **Continue**.

   To Subtract Minutes – Select **Add 1-120 min** to subtract minutes.
   Key in the number of minutes you need to add and select **Continue**.

7. The display returns to Time and Timeouts menu.

8. Press **Clear** (back arrow key) to return to **Options** menu.

Setting Daylight Savings Time

1. Press **Options**.
2. Press **Page Down**.
3. Select **Time and Timeouts**.
4. Press **Page Down**.
5. Select **Daylight Saving**. The display shows the current setting.
6. Select **Enable** to use Daylight Saving Time, or select **Disable** if you don't use Daylight Saving Time. Your selected setting is saved and the display returns to the Time and Timeouts menu.
7. Press **Clear** (back arrow key) to return to Options menu.

Setting, changing, or disabling a lock code

The lock code prevents unauthorized access to your mailing system in these two situations:

- When system is in sleep mode
- When the system is in a soft power-down mode, which occurs when you press Lock / Power on the upper right corner of your meter

To set the lock code

1. Press **Options**.
2. Press **Page Down** twice.
3. Select **Lock Code / Passwords**.
4. Select **Meter Lock Code**.
5. Enter a new 4-digit lock code at the prompt.
6. Select **Continue**.
7. Re-enter the new lock code to confirm.
8. Select **Continue**.
9. Press **Home** to return to the Home screen.

To change the lock code

1. Press **Options**.
2. Press **Page Down** twice.
3. Select **Lock Code / Passwords**.
4. Select **Meter Lock Code**. If there is an existing lock code, the system prompts for the 4 - digit code.
5. Select **Change Lock Code**.
6. Enter a new 4-digit lock code at the prompt.
7. Select **Continue**.
8. Re-enter the new lock code to confirm.
9. Select **Continue**.
10. Press **Home** to return to the Home screen.

To disable the lock code

1. Press **Options**.
2. Press **Page Down** twice.
3. Select **Lock Code / Passwords**.

4. Select **Meter Lock Code**. If there is an existing lock code, the system prompts for the 4 - digit code.
5. Select **Disable Lock Code**.
6. When the message **Meter Lock Code Has Been Disabled** displays, select **Continue**.
7. Press **Home** to return to the Home screen.

Setting Up or Disabling the Supervisor Password

A Supervisor password can be used to prevent unauthorized account changes within the Departmental Accounting feature. If you establish a Supervisor password, a user will need to enter this password to add, edit, or delete Departmental Accounts; and for clearing Departmental Account totals.

NOTE: You need to set up a Supervisor password also if you want to enable Account passwords. See *Editing Account Name and Password.*

1. Press **Options**.
2. Press **Page Down** twice.
3. Select **LockCode/Passwords**.
4. Select **Supervisor Password**. If there is an existing lock code, you are prompted to key in the 4-digit code.
5. You then have a choice to either disable the password (if present) or change/establish the password.

   To Disable the Password – Select **Disable Password**. At the "Supervisor Password has been disabled" message, select **Continue**.

   To Change or Establish the Password – Select **Change password**. At the prompt, type in a password (4 digits) and select **Continue**. Re-enter the new password again to confirm and select **Continue**. At the "Supervisor Password has been enabled" message, select **Continue**.
6. Press **Clear** (back arrow key) to return to Options menu.

Turning Scale On or Off

You may turn on and off the scale function as necessary.

1. At the Home screen, press the selection key next to **SCALE:** line.
2. Select **Turn Scale OFF (or ON)**.
3. You return to the Home screen with either the scale on or off.

Setting Scale Options (if using scale option)

There are several options you can set with your scale such as:

- Zeroing the weight on the scale
- Turning the scale on/off
- Viewing metric weights
- Saving/changing class or ZIP settings when weight changes on your scale.

Most of the scale options are accessed by pressing the selection key next to SCALE: line at the Home screen.

Zeroing your Scale

Reset your scale to zero to reduce the chance of accidentally printing the wrong postage.

Follow these steps to zero your scale:

1. Press **SCALE:** from the Home screen.
2. Select **Zero the scale**.
3. The scale will zero out the weight and you return to the Home screen.

Related articles

- *Resolving scale and weighing issues on your meter*
- *Scale not weighing or no scale line*
- *Setting your scale location code*

View Metric Weight

You can display a weight in metric values (grams or kilograms) as needed. This is helpful when you are using the internal rating feature and need the weight of an item when sending to a country whose rates are based on metric values.

1. At the Home screen, press the selection key next to **SCALE:** line.
2. Select **View metric weight**.
3. The current weight displays in grams.
4. Select **Continue** to return to the Home screen.

Setting Weight Change Options

You can set how the scale reacts regarding the class of service or ZIP code when the weight changes.

1. At the Home screen, press the selection key next to **SCALE:** line.
2. Press **Page Down**.
3. You have a choice to set the class setting or ZIP setting.

   To Change Class Settings – Select **Change/Retain class**. Select either change class or retain class when weight changes. The current condition is listed at the bottom of the screen.

   To Change ZIP Settings – Select **Change/Retain ZIP**. Select either change ZIP or retain ZIP when weight changes. The current condition is listed at the bottom of the screen.

4. Press **Clear** (back arrow key) to return to the Home screen.

Setting Class Change Options

You can set how the scale reacts regarding the ZIP code when the class changes.

1. At the Home screen, press the selection key next to **SCALE:** line.
2. Press **Page Down** twice.
3. Select **Change/Retain Class**.
4. Select either change class or retain class when ZIP Code changes. The current condition is

listed at the bottom of the screen.

5. Press **Clear** (back arrow key) to return to the Home screen.

Setting the High Funds Warning

You can have the machine warn you when you manually key in a postage value that is higher than a maximum amount that you specify. This feature helps prevent you from accidentally printing a postage value that's more than you need.

NOTE: This warning does not display for postage amounts determined by the internal rating feature.

1. Press **Options**.
2. Press **Page Down**.
3. Select **Postage Values**.
4. Select **High postage amount**.
5. Key in the value you want, including the digits to the right of the decimal point if you want a fractional value like .75 or $1.50. Select **OK**.
6. Press **Clear** (back arrow key) to return to Options menu.

Setting the Low Funds Warning

1. Press **Options**.
2. Press **Page Down**.
3. Select **Postage Values**.
4. Select **Low funds amount**.
5. Key in the amount you want (in whole dollars only). Select **OK**.
6. Press **Clear** (back arrow key) to return to Options menu.

Enabling Scale Stabilizing

In a typical office environment, you may encounter ventilation systems occasionally blowing on the scale, accidental bumps to the scale and/or platform, and people dropping mail onto the platform. This could result in unstable weight readings and frequent scale re-zero operations. You can minimize

these disturbances by enabling the scale stabilizing feature. Enabling this feature could cause a slight delay in scale response.

1. Press **Options**.
2. Press **Page Down**.
3. Select **Turn items ON/OFF**.
4. Press **Page Down**.
5. Select **Scale Stabilizer**.
6. The current setting (YES or NO) is listed on the screen. Follow the prompt to change the setting.
7. Press **Clear** (back arrow key) to return to the Home screen.

Setting Language Preference

The machine is capable of displaying all screens, operator prompts, and options in either English or Spanish (Español). English is the default language when the machine initially powers up. To change language:

1. Press **Options**.
2. Press **Page Down** twice.
3. Select **Advanced Features**.
4. Press **Page Down** once.
5. Select **Change Language**.
6. Select the desired language, English or Spanish.
7. Press **Home** to return to the Main screen. The language you select remains in effect until it is changed again.

Install Mode Options

Running “Install Mode” allows you to review, and change if desired, most of the values that were selected when the machine was first installed via the procedure in the Quick Install Guide.

If you no longer have a copy of the Quick Install Guide that came with your machine, you can download one from the Pitney Bowes website, refer to *Pitney Bowes Contact List* for more information.

NOTE: Do not run this option unless directed to do so by your Pitney Bowes representative.

To run the install mode:

1. Press **Options**.
2. Press **Page Down** twice.
3. Select **Advanced Features**.
4. Press **Page Down** once.
5. Select **Run Install Mode**.

   Follow the screen prompts until you reach the “Installation Successful” screen. Select **OK** and you return to the main screen with your new values active.

This page intentionally left blank.

11 - Using the Preset Feature

About Presets 103
Viewing presets 104
Defining New Values for the Normal Preset 104
Selecting a Custom Preset 105
Defining a New Custom Preset 105
Editing a Custom Preset Name 105
Deleting a Custom Preset 106

About Presets

What are Presets

A preset stores commonly used settings for machine values like; postage amount, class, advertisement, inscription, should date be printed, mode, horizontal position, or any special services. These value option will vary upon how your machine is configured.

Your machine has two types of presets, Normal and Custom.

Normal Preset:
The Normal Preset comes pre-configured in your machine. This preset contains the most frequently used values for postage class, postage amount, special services, etc. These values appear on your display when you first powered on your machine, or after it awakens from sleep mode. You can edit the Normal Preset values, see *Defining New Values for the Normal Preset.*

Custom Preset:
Your machine can store up to 10 additional presets, called Custom Presets. Custom Presets can not be edited once established, however, they can be deleted and a new Custom Preset can then be established.

IMPORTANT:

Always Include the USPS Class in the Preset
When setting up the preset, be sure to include the USPS class. This ensures that whenever there is a USPS rate change and you download the new rates to your mailing machine, your preset will be automatically updated with the new rate.

Normal Preset NOTES:

- The Normal preset must include a class.
- You cannot modify the name of the Normal Preset, but you can edit the values.
- You cannot assign an account to the Normal Preset (if you have enabled the accounting feature).
- ***When a rate change becomes effective, always check the postage values assigned to all presets to make sure that they comply with the new rates.***

Custom Preset NOTES:

- There is no option to edit a custom preset, but you can define a new custom preset based on the current condition of the machine (and then delete your old custom preset).
- Custom Preset postage values are subject to the high value warning feature. This feature warns you when you manually key in a postage value that is higher than your typical value to help prevent you from accidentally printing an incorrect postage value. See *Setting the High Funds Warning.*
- ***When a rate change becomes effective, always check the postage values assigned to all presets to make sure that they comply with the new rates.***

Viewing presets

1. Press **Custom Presets**.
2. Press **Page Down**.
3. Select **View Preset**.
4. Select the preset you wish to view.
5. Use the **Page Down / Page Up** buttons to navigate the preset. Details such as the carrier/class, custom ad, and other stored information will be displayed.

Defining New Values for the Normal Preset

1. Establish the proper settings on the machine (such as 1st Class letter, No Ad, etc.) that you want the preset to contain.

2. Press **Custom Preset**.

3. Select **Define Normal Preset**.

4. You will be prompted to choose if all current values are correct:

   A. If you press **Yes/Enter**, the new values are saved and you return to the Custom Presets menu.

   B. If you press **No**, the system will display the current values. Press **Page Down** to see the remainder of the current values.

5. Select **Continue** at the last screen to return to the first screen in step 4, and save the current values as the Normal preset, or press **Home** to return to the Home screen to establish the proper settings (see step 1).

Selecting a Custom Preset

1. Press Custom Preset.
2. Select **Select Preset**. The display lists all presets created on your system.
3. Press **Page Down** to see additional choices (if available).
4. Select the preset you want to use. You return to the Home screen with the preset values chosen.

Defining a New Custom Preset

1. Establish the proper settings on the machine (such as No Ad, $X.XX [postage amount], etc.) that you want the preset to contain.
2. Press **Custom Preset**.
3. Select **Define New Preset**.
4. You will be prompted if all current values are correct.

   A. If you press **Yes/Enter**, the system will prompt for the name of this preset. Key in a name for the preset. It can be up to twelve alpha/numeric characters long. To access alpha characters, repeatedly press the appropriate number key until the desired character displays. When finished, select **OK**. The new values are saved and you return to the Custom Preset menu.

   B. If you press **No**, the system will display the current values. Press **Page Down** to see the remainder of the defined values.

5. Select **Continue** at the last screen to return to the correct values prompt in Step 4, or press **Home** to return to the Home screen.

Editing a Custom Preset Name

1. Press **Custom Preset**.
2. Press **Page Down** and select **Edit Preset Name**.
3. The display lists all the Custom Presets. Select the preset you want to edit.

4. The system will prompt for the new name of this preset. Key in the new name for this preset. It can be up to twelve alpha/numeric characters long. To access alpha characters, repeatedly press the appropriate number key until the desired character displays.
5. When finished, select **OK**. You return to the Custom Preset menu.
6. Press **Home** to return to the Home screen.

Deleting a Custom Preset

Deleting a Custom Preset removes all the values assigned to it and removes it from the Preset Menu.

NOTE: You can't recover a deleted preset.

1. Press **Custom Preset**.
2. Press **Page Down** and select **Delete Preset**. The display lists all presets.
3. Select the preset you want to delete.
4. At the prompt to clear the Preset, press **Yes/Enter**. The preset is deleted.
5. The system confirms that the preset has been deleted. Select **Continue**. You return to the Custom Preset menu.
6. Press **Home** to return to the Home screen.

This page intentionally left blank.

12 - Passwords

About Passwords and Meter Functions.....109

About Passwords and Meter Functions

Passwords can be set up on the machine to prevent unauthorized access to the machine and/or to a specific account.

- For information on settinp up a password for the machine, referred to as a Lock Code, refer to *Setting or Disabling the Lock Code*.
- For information on settinp up a supervisor password, refer to *Setting or Disabling the Supervisor Password*.
- For information on setting up a password for an account, refer to *Creating an Account*.

13 - Connecting to the Data Center

How You Connect to the PB Data Center.....111
Connect to the PB Data Center with SmartLink Using an Ethernet Cable to a LAN Port.....112
Setting up a wireless (WiFi) connection with a SmartLink device.....113
Connect to the PB Data Center via PC Meter Connect Application on your Computer.....114

How You Connect to the PB Data Center

In order to download postage to your meter and perform updates (postal rate updates, inspections and system updates) on your machine, you must connect to the Pitney Bowes Data Center.

Your meter can connect to the Pitney Bowes Data Center using one of the following methods: **Smartlink, PC Meter Connect**.

Connect Using SmartLink

When you link your meter to the Pitney Bowes Commerce Cloud using the SmartLink device, you can access the full benefits of SmartLink including:

- Automatic USPS rate updates and software updates
- Low ink and low fund notifications
- Simplified ordering for meter ink.
- Remote diagnostics with support and error troubleshooting notifications
- Customized insights on meter and postage usage
- Adding postage to your meter from your computer

Two Ways to Connect Using SmartLink

1. *Connect Using the SmartLink device with an Ethernet Cable to a LAN Port*.
2. *Connect Using the SmartLink device with a Wireless Connection*.

Connect Directly Through Your Computer Using PC Meter Connect

This method connects the machine directly to a PC that has PC Meter Connect software installed. No additional hardware is used.

For more information see *Connect to the PB Data Center via PC Meter Connect Application on Your Computer.*

Connect to the PB Data Center with SmartLink Using an Ethernet Cable to a LAN Port

Item	Description
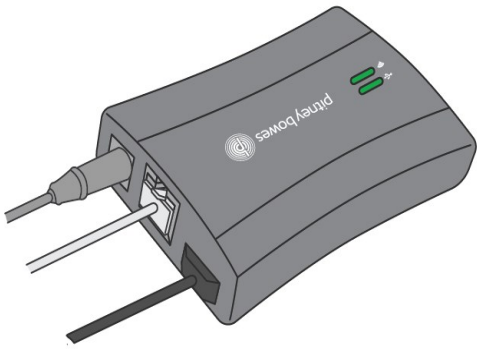	**SmartLink** Device

This method connects the digital postage meter to the internet through the SmartLink device using an Ethernet cable.

- Installation takes about 10 minutes
- Requires access to an internet network

When you link your meter to the Pitney Bowes Commerce Cloud using the SmartLink device, you can access the full benefits of SmartLink including:

- Automatic USPS rate updates and software updates
- Low ink and low fund notifications
- Simplified ordering for meter ink.
- Remote diagnostics with support and error troubleshooting notifications
- Customized insights on meter and postage usage
- Adding postage to your meter from your computer

For more information and instructions on how to set up this type of connection, refer to the *SmartLink Setup Instructions* available on our website.

The connections between the digital postage meter, the SmartLink device and the internet source are shown below.

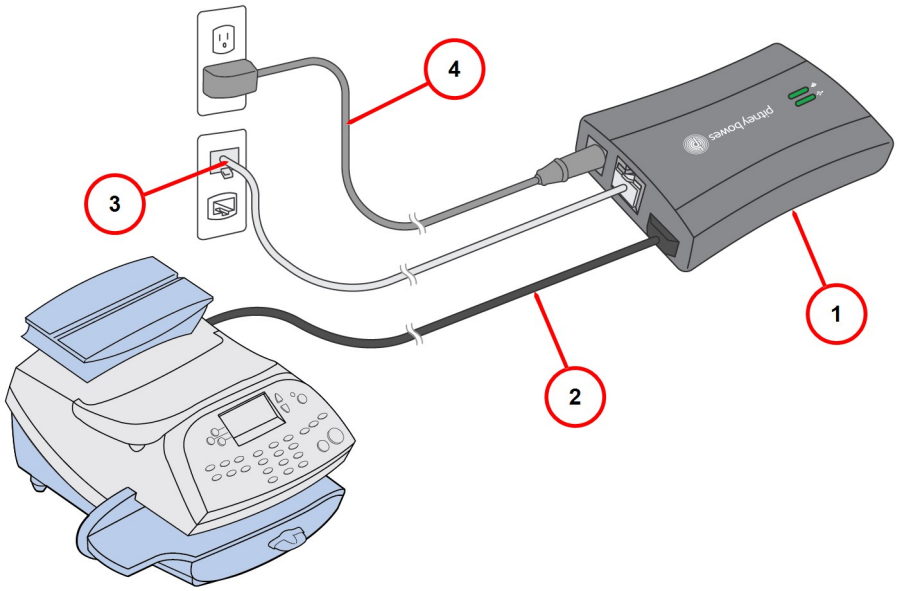

Item	Description
1	SmartLink device
2	USB cable connecting SmartLink device to digital postage meter
3	Ethernet LAN cable to network port (internet connection)
4	AC adapter

Setting up a wireless (WiFi) connection with a SmartLink device

To configure a wireless (WiFi) connection with a SmartLink™ device:

1. Go to the *SmartLink Setup page*.
   a. Select **Wireless** under 'Choose Your Connection.'
   b. Follow the directions to configure your wireless connection.
2. After configuring your wireless connection:
   - If the light on your SmartLink device blinks green, then you are done connecting your SmartLink device.
   - If the light on your SmartLink device does *not* blink green, after 3 minutes, see the **Wireless Internet Troubleshooting** section on the *SmartLink troubleshooting page*

Internal Notes

Note: In some occasions, you will see the G9XX connected via Smartlink. Service technicians and the networking team send these out for the G9XX. Call Center Agents will support these clients and replace them if necessary.

If you cannot get the WiFi to configure:

1. Configure the SmartLink for an wired connection.
2. Connect and wait for the solid green light to change to blinking, this updates the firmware on the SmartLink.
3. Reconfigure the SmartLink on WiFi.

SmartLinkTM Technical Communication Specifications:

We do not have a connection spec document for SmartLink the known requirements are listed here:

- Wi-Fi standards supported: IEEE 802.11b/g/n 2.4GHz networks and 802.11a/n 5GHz networks. 802.1X networks are not supported.
- Ports Used: Connects with port 31314, 993, or 443 using TCP. Gets upgrades with port 80 using TCP/HTTP.
- URL: Connects to agent.sl.pb.com
- Data Transferred via HTTPS (with TLS 1.2)
- Only uses outbound communications through the network to minimize the possibility of the communications betting blocked.

Tip: For companies with extra secure networks, we recommend using a proxy username and password and allow outbound communications on 31314 and 80.

Connect to the PB Data Center via PC Meter Connect Application on your Computer

PC Meter Connect™ desktop application is PC-based software that allows you to use your PC computer's high-speed Internet connection to connect your mailing machine to the PB Data Center. A USB cable is provided to connect your machine to a free USB port on a PC running PC Meter Connect.

Using PC Meter Connect directly from your PC allows you to:

- Add postage
- Perform Centerinspections
- Get rate updates

For details on setting up your machine initially using PC Meter Connect, refer to *How to Install PC Meter Connect* available on our website.

NOTE: No additional hardware, such as SmartLink or the Communication Device is used.

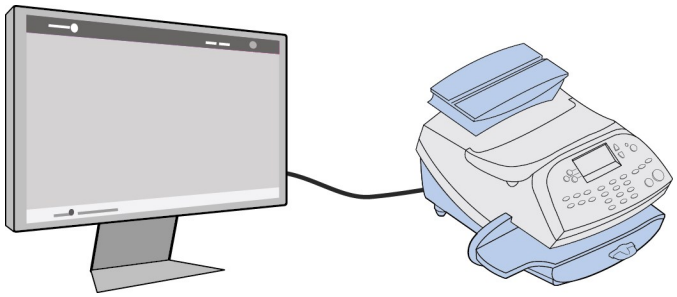

14 - Adding Postage

Checking Postage Funds in the Meter..... 117
Checking your PB Postage Account Balance.....117
Adding Postage to Your Machine.....118
Withdrawing Postage Funds from the Meter..... 119

Checking Postage Funds in the Meter

Postage is stored internally in your meter. When you need to add more, you establish communications between your meter and the Pitney Bowes Data Center, and specify the amount of postage you wish to download. The postage is electronically transferred to your meter from your Pitney Bowes Postage By Phone® meter payment account.

You must have a Pitney Bowes Postage By Phone meter payment account and have funds available in it before you can download the funds (for postage) to your meter. If you need to establish a Postage By Phone account contact Pitney Bowes. See *Pitney Bowes Contact List*.

You can check the funds (postage) in your machine.

1. Press **Funds**.
2. The funds available, used and pieces processed will display.
3. Press **Clear** (back arrow key) or **Home** to return to Home screen.

FUNDS	
Available	$204.94
Used	$17.06
Total Pieces	40

Description *Available*: the amount of funds (postage) left in your meter. *Used*: the total of all postage ever used in the meter. *Total Pieces*: the total number of mail pieces run through the meter that had postage applied. *Active*:indicates if the rate is active (Yes or No).

Checking your PB Postage Account Balance

PB Postage funds are the funds that you have available for download in your account on the Data Center. The PB Postage balance does not include funds already in your machine.

The following method describes how to check the balance of funds available on the Pitney Bowes Data Center.

1. Make sure that your machine can make the connection to the Data Center.
2. Press **Add Postage**.
3. Select **Check PBP balance**.

4. The machine connects to the Pitney Bowes Data Center. Various status screens display.
5. The Prepaid and Other balances display.

Adding Postage to Your Machine

You can add postage to your machine any time as long as you have enough funds in your Postage By Phone® system account.

Adding Postage at the Machine

The following method describes how to add postage using the machine.

1. Press **Funds**. The amount left in the machine displays.
2. Use the Review keys to scroll to "Refill postage?" and press **Enter/yes**. If you do not see this option, do the following:
   a. Press **Lock** to enter sleep mode. Press **Enter/yes** to confirm.
   b. When meter is in sleep mode, press any key to waken it.
   c. Enter the password for the lock code (not a password for an ac- count) and press **Enter/Yes**. See supervisor if you need help.
   d. Press **Funds** and continue at the beginning of this step.
3. Key in the refill amount (whole numbers only). NOTE: The minimum amount of postage you can add is $1.
4. At the refill amount confirmation prompt, press **Enter/yes**.
5. The machine connects to the Pitney Bowes Data Center. Depending on your connection type (LAN or internet) various screens may display showing the status of the process. When complete, the refill successful message displays.

6. Press **Enter/yes**. When prompted for a receipt, insert an envelope/tape sheet in the machine (see sample refill receipt with explanations below). When finished the main screen appears.

Description
Postage in Meter: Amount of postage (funds) in your meter.
Prepaid on Account: Amount you have left in your Postage By Phone® system account of those funds you paid for in advance (by sending in a check, direct withdrawal, etc.).
Credit Line Available: Amount you have left in your Postage By Phone® system account of those funds you established as credit with Pitney Bowes (such as Purchase Power®, etc.).
Refill Amount: Amount of your refill.
Account No. : Your Postage By Phone® system account number.
Meter No. : Your meter serial number (on record with the USPS) which is printed on the meter stamp.

Withdrawing Postage Funds from the Meter

For a meter withdrawal, you need to move the remaining balance of postage from your system into your Postage By Phone Account®. Normally this is done if you are no longer going to use the machine.

NOTE: Contact Pitney Bowes before withdrawing funds, see *Pitney Bowes Contact List*.

NOTE: The machine must be connected to the Data Center to withdraw funds.

1. Press **Options**.
2. Press **Page Down** to the third screen.
3. Select **Advanced Features**.
4. Press **Page Down** to the second screen.
5. Select **Meter Withdrawal**.
6. Select **Transfer all funds from meter to PBP account**.
7. The system connects into the Pitney Bowes Data Center (this may take a few moments). Various screens displays, letting you know the status of the process.
8. The Transfer Successful screen displays. Select **Continue**.
9. At the prompt "Print Funds Report?", press **Yes/Enter** and insert envelope/tape sheet through machine, or simply press **Home**. "Out of Service" appears on the display.

Funds Report				JAN 07 08 9:55P
	Used:	$464 . 270		
	Available:	$000 . 000	Batch Count:	733
	Total Pieces:	735	Batch Value:	$464 . 270
	Control Sum:	$464 . 270	PBP Serial No.:	0011969

NOTE: "Available" should show a zero ($000.000) dollar amount.

This page intentionally left blank.

15 - Meter Updates and Inspections

About Meter Updates and Inspections 123
About Postal Rate Changes 124
Procedure for Downloading New Postal Rates, Updates, Inscriptions or Ads 125
Downloading New Postal Rates Using PC Meter Connect 126
Performing Meter Inspections 126

About Meter Updates and Inspections

When you connect to the Pitney Bowes Data Center, refer to *How You Connect to the PB Data Center* to add postage or perform other transactions, the Data Center may activate other downloads while the machine is connected.

If a system / postal update or download is available the system displays a message:

- If a download is not mandatory, you are prompted to either “Get Update now” or “Skip; Get later”. Select the one that makes sense to you at that time.
- If a download is mandatory, only “Get Update now" displays and you must perform the download.

A message displays when the download is complete:

- If you need to reboot the system, the prompt "Restart now" displays. Select this to restart the system.
- If it is not necessary to reboot, simply select **Continue** to return to the Home screen.

IMPORTANT:

Do not remove power or the Internet connection to the Pitney Bowes Data Center during a system upgrade or rates download.

Wait until the meter has finished processing before disconnecting the meter. You will know this has occurred when the meter's Home screen showing postage and date displays

---

Types of Downloads / Updates Available

The following downloads / updates are available:

System Update

If there has been an important update to your system, you will be notified that a required update is necessary.

Envelope Ads / Postal Inscriptions

If you ordered new envelope advertisements or postal inscriptions, you will be notified that you can perform a download to obtain these.

Upload Pending Electronic USPS® Confirmation Services Records

If you are using the optional USPS® Confirmation Services feature, your services records can be uploaded to USPS® for processing. Refer to USPS Confirmation Services Guide on our website for more information on this optional feature. See *Pitney Bowes Contact List.*

Postal/ZIP Code Update

If the Postal Code on record at the Pitney Bowes Data Center does not match the Postal / ZIP Code of your system, the code will be downloaded into your system. (When a system is moved to a new Postal Code, the Data Center enters the new code into the record. The system is updated when a connection is made to the Data Center.) To initiate a download for Postal/ZIP Codes, follow the *Procedure for Downloading New Postal Rates, Updates, Inscriptions and Ads*.

Postal Rate Update

Refer to *Downloading New Postal Rates* for information and details.

Postal Inspection

Refer to *Performing Meter Inspections* for information and details.

About Postal Rate Changes

Postal rates change periodically by the . If new rates are available, you can download them quickly and easily, directly from the Pitney Bowes Data Center. The new rates are normally available for download at least seven days before the effective date.

The display tells you when a Rate Change update is complete. It also tells you if the update is immediate or takes effect at a later date by listing the new date. Once the effective date is reached, the system automatically switches to the new rates.

Please be advised:

- If you download the update and the rates go into effect in the future, you will not print postage with the new rate until the new rates become effective.
- If the rate for a First Class letter is changing and is effective immediately, a screen displays showing the present preset postage and prompts you to reset the normal preset postage. Press **Yes/Enter**. A screen displays for you to enter the new rate.
- When a Rate Change update takes place it may also affect the preset values in your mailing machine. Check all of the preset settings to insure that it conforms to the new rates. Refer to *Using the Preset Feature* for more information.

If you need to restart an interrupted download or initiate a download for postal inscriptions, ads, system updates, or rate updates, refer to *Procedure for Downloading New Postal Rates, Updates, Inscriptions,and Ads*.

Procedure for Downloading New Postal Rates, Updates, Inscriptions or Ads

Use this procedure to initiate a download for postal rates updates, inscriptions, ads, or system updates or to restart an interrupted download.

If you are connected to the PB Data Center using SmartLink

1. Verify that your machine is connected to the PB Data Center.
2. Press **Options**.
3. Press **Page Down** to the third screen.
4. Select **Connect-Data Center**.
5. Select **Uploads & Downloads**.
6. You will see a series of messages indicating that your machine is dialing into the PB Data Center.
7. Once connected to the PB Data Center you are informed of any downloads available.
8. Follow the prompts to start the download(s) as necessary. Various screens display, letting you know the status of the process.
9. When finished, press **Enter/yes** to return to the main screen.

Downloading New Postal Rates Using PC Meter Connect

1. Click on the **Updates** tab from the PC Meter Connect main window.
2. The meter checks to see if there are any updates required. The current active rates and any pending rate updates are displayed in the Support Information panel on the left of the screen.

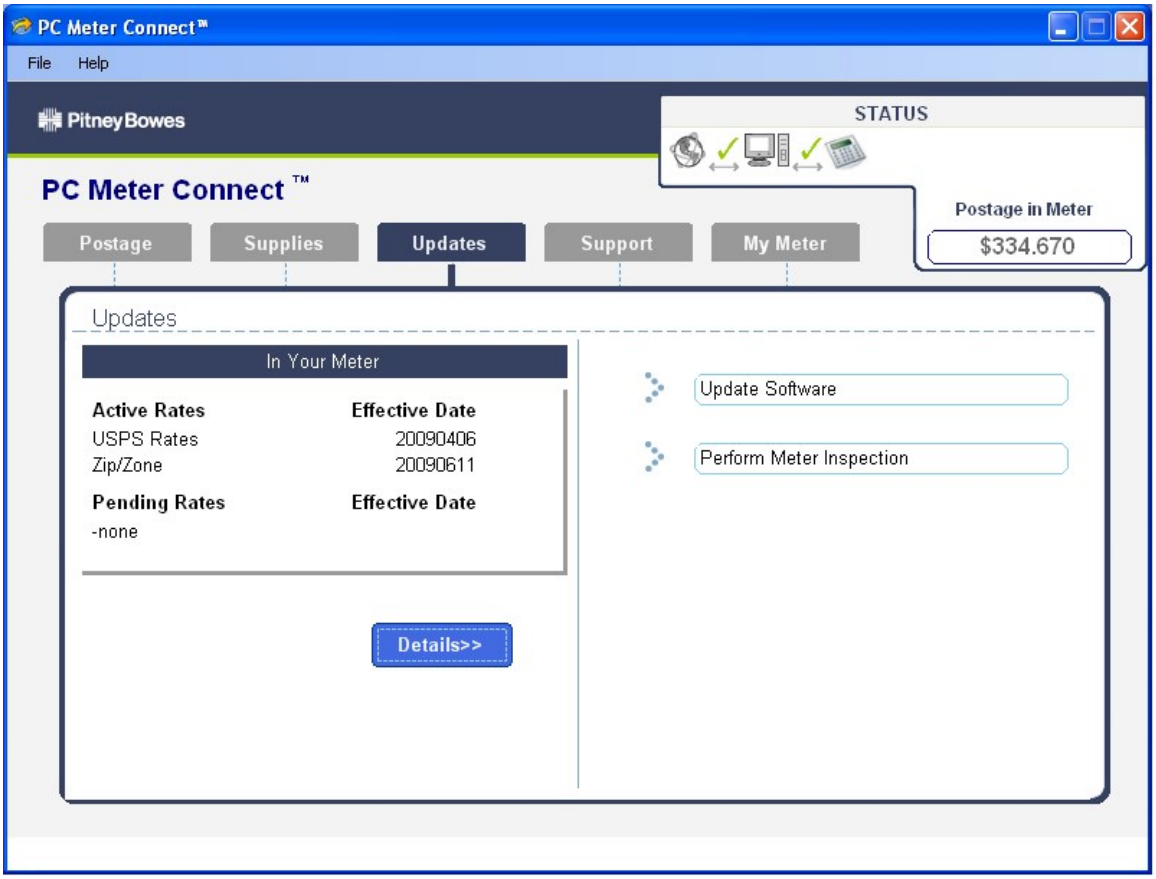

3. When completed the system will prompt you to click **Continue**, then **Done**.
4. If updates are required click on the **Update Software** link in the Task panel on the right side of the screen.

Performing Meter Inspections

The USPS requires a postal inspection of your machine every 120 days.

This postal inspection requirement can be automatically met by connecting to the Pitney Bowes Data Center to check your Postage By Phone® meter payment account balance or to add postage to your meter. Even though this procedure is the same as checking your Postage By Phone account balance, it satisfies the USPS inspection requirements.

1. Make sure your machine can make connection to the Data Center.
2. Press **Add Postage**.
3. Select **Check PBP balance**.
4. The system connects to the Pitney Bowes Data Center (this may take a few moments). Various screens displays, letting you know the status of the process.
5. The Prepaid and Other balances displays. Press **No**.
6. If there are no updates for your system, you will return to the Home screen. If there are updates available, the display notifies you of this fact.

16 - Supplies and Options

Supplies and Options.....129

Supplies and Options

Supplies

Refer to *Pitney Bowes Contact List* for web addresses and phone numbers to order supplies.

Options

Pitney Bowes offers a number of flexible options so you can tailor your mailing system to meet your exact needs today, and expand it as your business grows tomorrow. Contact your Pitney Bowes Sales Representative for more information, see *Pitney Bowes Contact List* for web addresses and phone numbers.

Integrated Weighing Platform (Scale)

The weighing platform allows you to accurately weigh mail and packages.

You can select from either a 5 lb. or a 10 lb. capacity scale.

Moistener

The moistener applies sealing fluid to the envelope flap. You can seal envelopes or leave them unsealed, depending on how you feed them.

Standard Accounting

The Standard Accounting feature tracks postage costs for departmental accounts. Depending on your model, you can order up to 50 accounts for your machine. See *Standard Accounting* for details.

Electronic USPS® Confirmation Services

This option allows you to get discounted fees from USPS® for selected services. Reference the DM Series Confirmation Services Guide on the support page of our website for more information on this feature. Refer to *Pitney Bowes Contact List* for web addresses.

Postal Inscriptions/Advertisements

Your system comes pre-loaded with several envelope ads and postal inscriptions. These give your mail a professional appearance and can turn your mailings into a powerful promotional tool. Pitney Bowes can also provide additional envelope adds and inscriptions if your needs require it, up to a total of 20 ads and 20 inscriptions.

Optional inscriptions and ads are convenient to add because they are done as system downloads via the Pitney Bowes Data Center.

This page intentionally left blank.

17 - Specifications

Specifications (Equipment and Materials).....133

Specifications (Equipment and Materials)

Equipment Specifications

Item	Description
Dimensions	Base Model 8.5" (215 mm) H x 13.6" (345 mm) W x 15.8" (401 mm) D With Scale 8.9" (226 mm) H x 13.6" (345 mm) W x 15.8" (401 mm) D With Scale and Moistener 8.9" (226 mm) H x 18.5" (470 mm) W x 15.8" (401 mm) D
Weight	**DM100i** 15 lbs. (6.8 kg) **DM200L** 16 lbs. (7.3 kg)
Power Requirements	100-240 VAC, 50/60Hz. 1.0A
Ports	1 USB Slave, 1 RJ-11
Operating Temperature	40°F (4°C) to 108°F (42°C
Sound Level	Machine noise is less than 70dba in accordance with EN ISO 7779, and ANSI 12.10.
LCD Display	4 lines, 20 characters long
Throughput	**DM100i** Up to 30 letters per minute **DM200L** Up to 40 letters per minute Actual throughput will vary, depending on the material used, machine condition, use of moistener, etc.
Print Resolution	600 x 400 dpi
Print Image Area	At least 1" (25.4 mm) x 6-5/8" (170 mm)
Ink Cartridge Life	Up to 3,000 impressions without an envelope ad. Actual ink yields vary with usage, graphics printed and environmental conditions.
Tape Sheets	Self-adhesive type, dual tape sheets for use on mail pieces that are too thick/ large to run in machine.
Envelope Ads	Up to 20 (internally held)
Postal Inscriptions	Up to 20 (internally held)
Maximum Imprint	$99.999

Material Specifications

Item	Description
Minimum Size	5" x 3" (127 mm x 76 mm)
Maximum Size	15" x 13" (381 x 330 mm)
Minimum Flap Depth	7/8" (22 mm)
Maximum Flap Depth	3" (76 mm)
Minimum Thickness	0.007" (0.18 mm)
Maximum Thickness	3/8" (9.5 mm)
Maximum Stack Height for Mail	2.5" (60 mm)

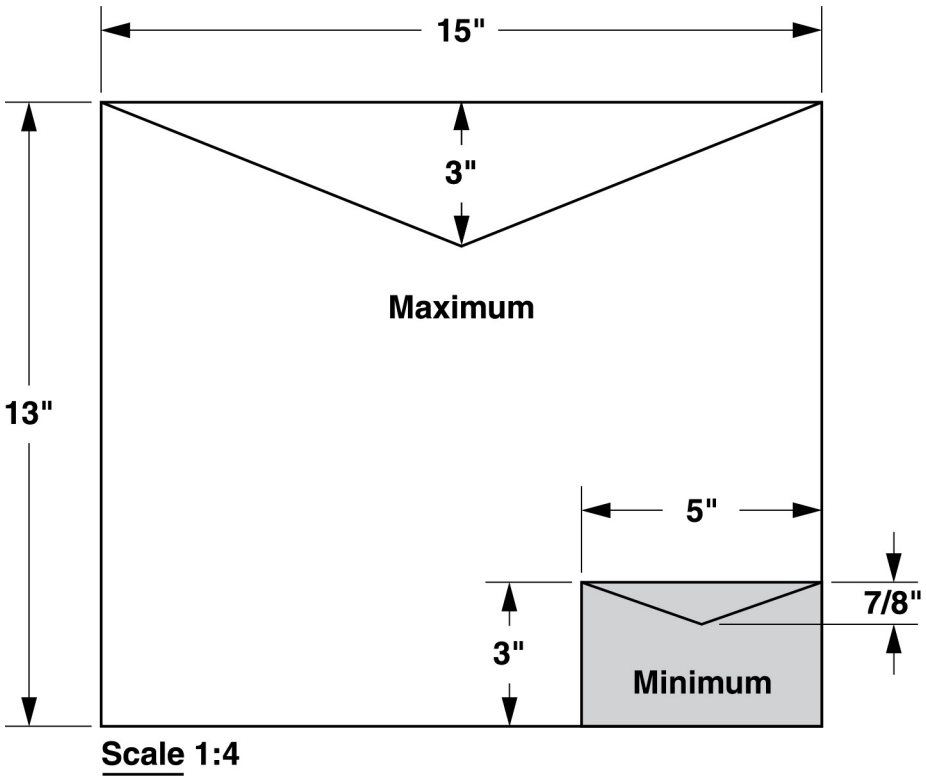

NOTE: For best results, always make sure your material conforms to these specifications.

This page intentionally left blank.

3001 Summer Street
Stamford, Connecticut 06926
www.pitneybowes.com

SV63202 Revision E
©2023 Pitney Bowes Inc.
All Rights Reserved