1

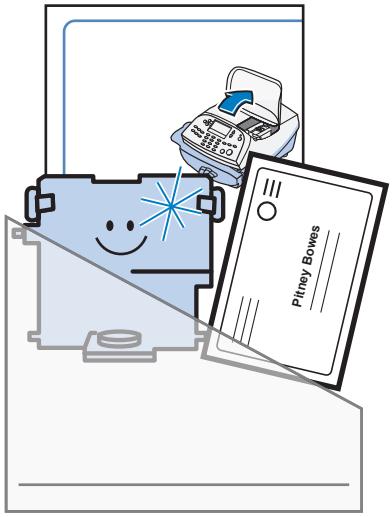

2

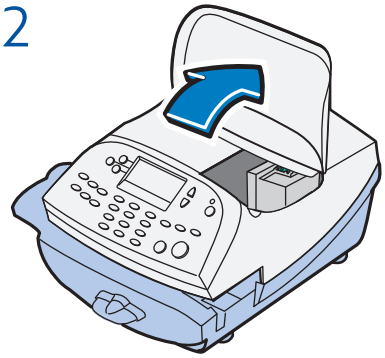

3

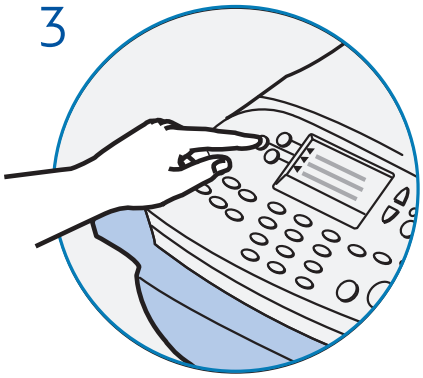

4

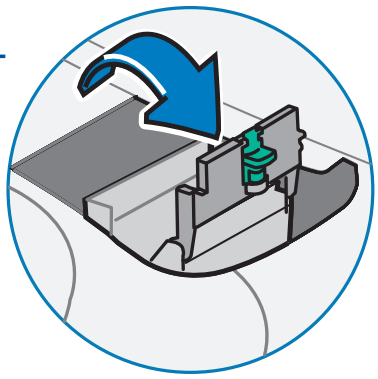

5

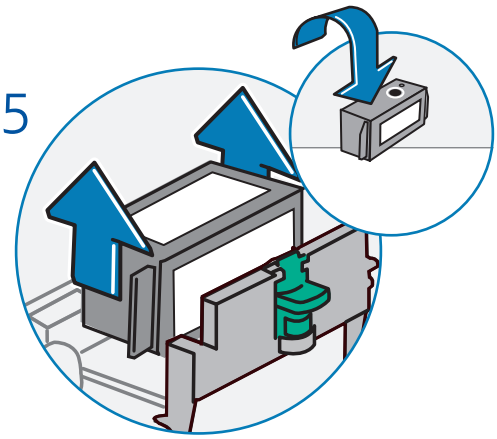

6

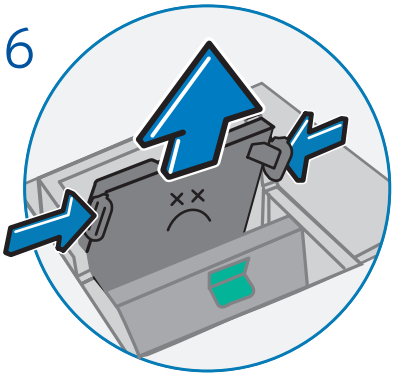

7

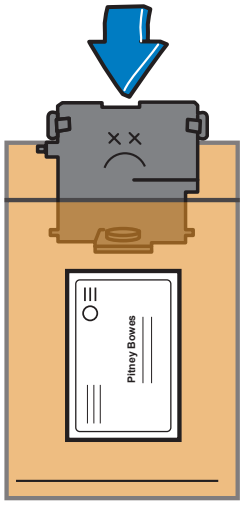

8

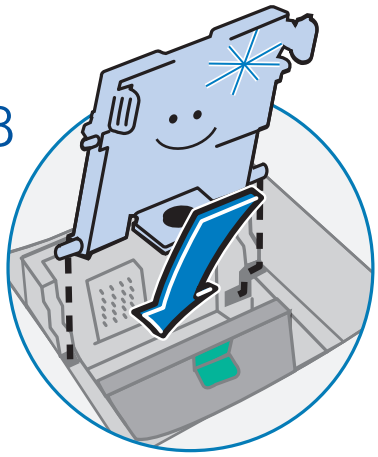

9

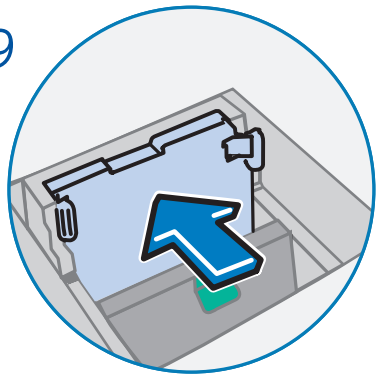

10

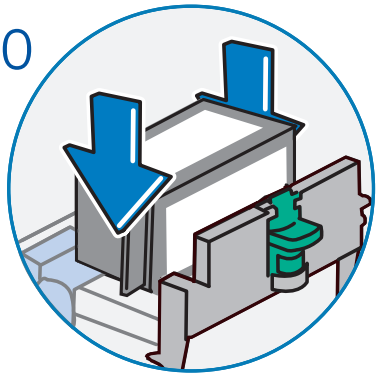

11

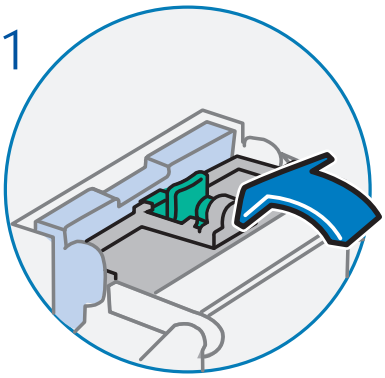

12

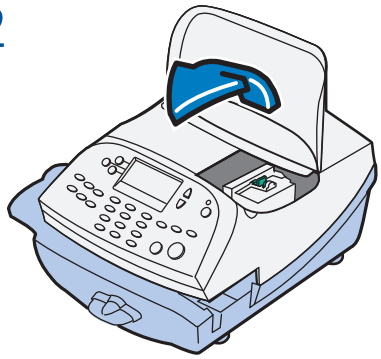

pitney bowes